SEWAGE PUMPING STATION
STANDARD DRAWINGS
FOR 0.0 - 6.0kW DIRECT ON LINE START STATION
SCADA ID:

DRAWING LIST

DRAWING NUMBER	DRAWING TITLE	REVISION
UWDSTD-E-DR-8002-01	TITLE AND INDEX SHEET	0
UWDSTD-E-DR-8002-02	INCOMING POWER SCHEMATIC DIAGRAM	0
UWDSTD-E-DR-8002-03	240VAC POWER SUPPLIES & DISTRIBUTION SCHEMATIC DIAGRAM	0
UWDSTD-E-DR-8002-04	24VDC POWER SUPPLIES SCHEMATIC DIAGRAM	0
UWDSTD-E-DR-8002-05	EMERGENCY PUMP STARTER & OVERFLOW CIRCUIT SCHEMATIC DIAGRAM	0
UWDSTD-E-DR-8002-06	COMMON CONTROL CIRCUIT SCHEMATIC DIAGRAM	0
UWDSTD-E-DR-8002-07	PUMP 1 POWER AND CONTROL SCHEMATIC DIAGRAM	0
UWDSTD-E-DR-8002-08	PUMP 2 POWER AND CONTROL SCHEMATIC DIAGRAM	0
UWDSTD-E-DR-8002-09	SCADAPACK DIGITAL INPUT SCHEMATIC DIAGRAM	0
UWDSTD-E-DR-8002-10	SCADAPACK DIGITAL I/O SCHEMATIC DIAGRAM	0
UWDSTD-E-DR-8002-11	SCADAPACK ANALOGUE INPUT (LOWER BOARD) SCHEMATIC DIAGRAM	0
UWDSTD-E-DR-8002-12	SCADAPACK ANALOGUE INPUT (UPPER BOARD) SCHEMATIC DIAGRAM	0
UWDSTD-E-DR-8002-13	SCADAPACK COMMUNICATIONS SCHEMATIC DIAGRAM	0
UWDSTD-E-DR-8002-14	PUMP STATION INSTRUMENTATION SCHEMATIC DIAGRAM	0
UWDSTD-E-DR-8002-15	EQUIPMENT SCHEDULE	0
UWDSTD-E-DR-8002-16	CABLE SCHEDULE	0
UWDSTD-E-DR-8002-17	TERMINAL LAYOUT	0
UWDSTD-E-DR-8002-20	ALTERNATE EQUIPMENT	0
UWDSTD-E-DR-8002-30	ELECTRICAL SWITCHBOARD - GENERAL ARRANGEMENT Sht 1 of 5	0
UWDSTD-E-DR-8002-31	ELECTRICAL SWITCHBOARD - GENERAL ARRANGEMENT Sht 2 of 5	0
UWDSTD-E-DR-8002-32	ELECTRICAL SWITCHBOARD - GENERAL ARRANGEMENT Sht 3 of 5	0
UWDSTD-E-DR-8002-33	ELECTRICAL SWITCHBOARD - GENERAL ARRANGEMENT Sht 4 of 5	0
UWDSTD-E-DR-8002-34	ELECTRICAL SWITCHBOARD - GENERAL ARRANGEMENT Sht 5 of 5	0
UWDSTD-E-DR-8002-50	SITE PLAN	0

A3

INDEX	DATE	REVISIONS	DRAWN	CHECKED	PASSED
0	01.02.22	RENAMED FROM UWSTD-E-SPS-6kW-DOL-001	YV	TGS	TGS

	INITIALS	DATE
DRAWN	A.K	18.02.21
CHECKED	LG	18.02.21
PASSED	JD	18.02.21

Unitywater

Unitywater
IFxxxxxx
SEWAGE PUMPING STATION - 0-6kW DOL
STANDARD DRAWINGS
TITLE & INDEX SHEET

SHEET OF SHEETS | SCALE N/A
REVISION DATE 01.02.22 | REVISION 0
DISCIPLINE CODE E
DRAWING NO.
UWDSTD-E-DR-8002-01

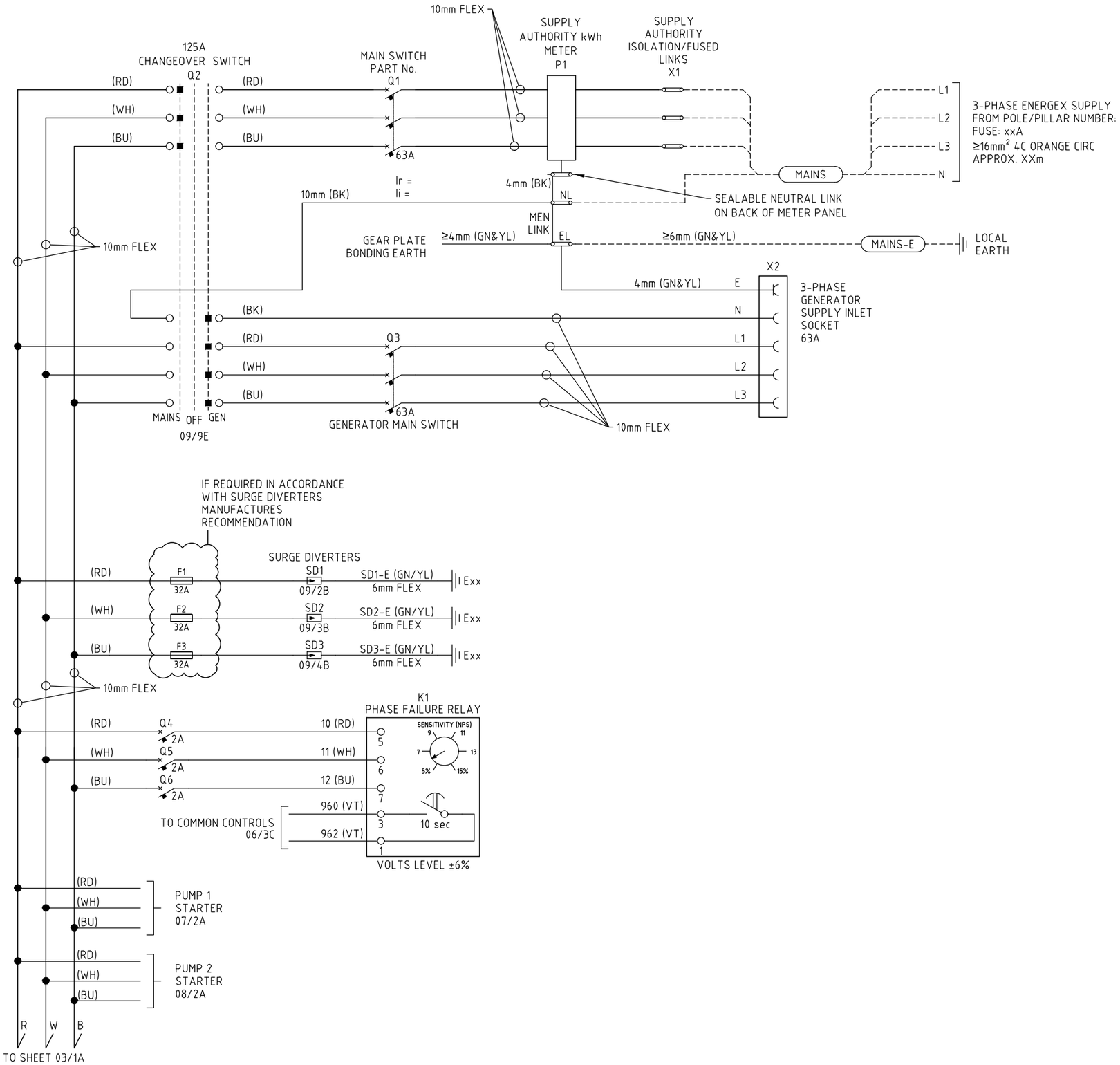

ARC FLASH DETAILS	
SHOCK HAZARD EXPOSURE	415VAC
MAXIMUM INCIDENT ENERGY AT 455mm WORKING DISTANCE	??? Cal/cm2
MAXIMUM ARC FLASH PROTECTION BOUNDARY	???mm

CONTACT REFERENCES

01/5G

DWG SHT. No. — GRID REFERENCE

LEGEND			
⊠	EARTH TERMINAL	○	DEVICE TERMINAL
∅	THROUGH TERMINAL		FUSE TERMINAL

A3

INDEX	DATE	REVISIONS	DRAWN	CHECKED	PASSED
0	01.02.22	RENAMED FROM UWSTD-E-SPS-6kW-DOL-002	YV	TGS	TGS

	INITIALS	DATE
DRAWN	A.K	18.02.21
CHECKED	LG	18.02.21
PASSED	JD	18.02.21

Unitywater

IFxxxxxx
SEWAGE PUMPING STATION - 0-6kW DOL
STANDARD DRAWINGS
INCOMING POWER SCHEMATIC DIAGRAM

SHEET OF SHEETS | SCALE N/A
REVISION DATE 01.02.22 | REVISION 0
DISCIPLINE CODE E
DRAWING NO. UWDSTD-E-DR-8002-02

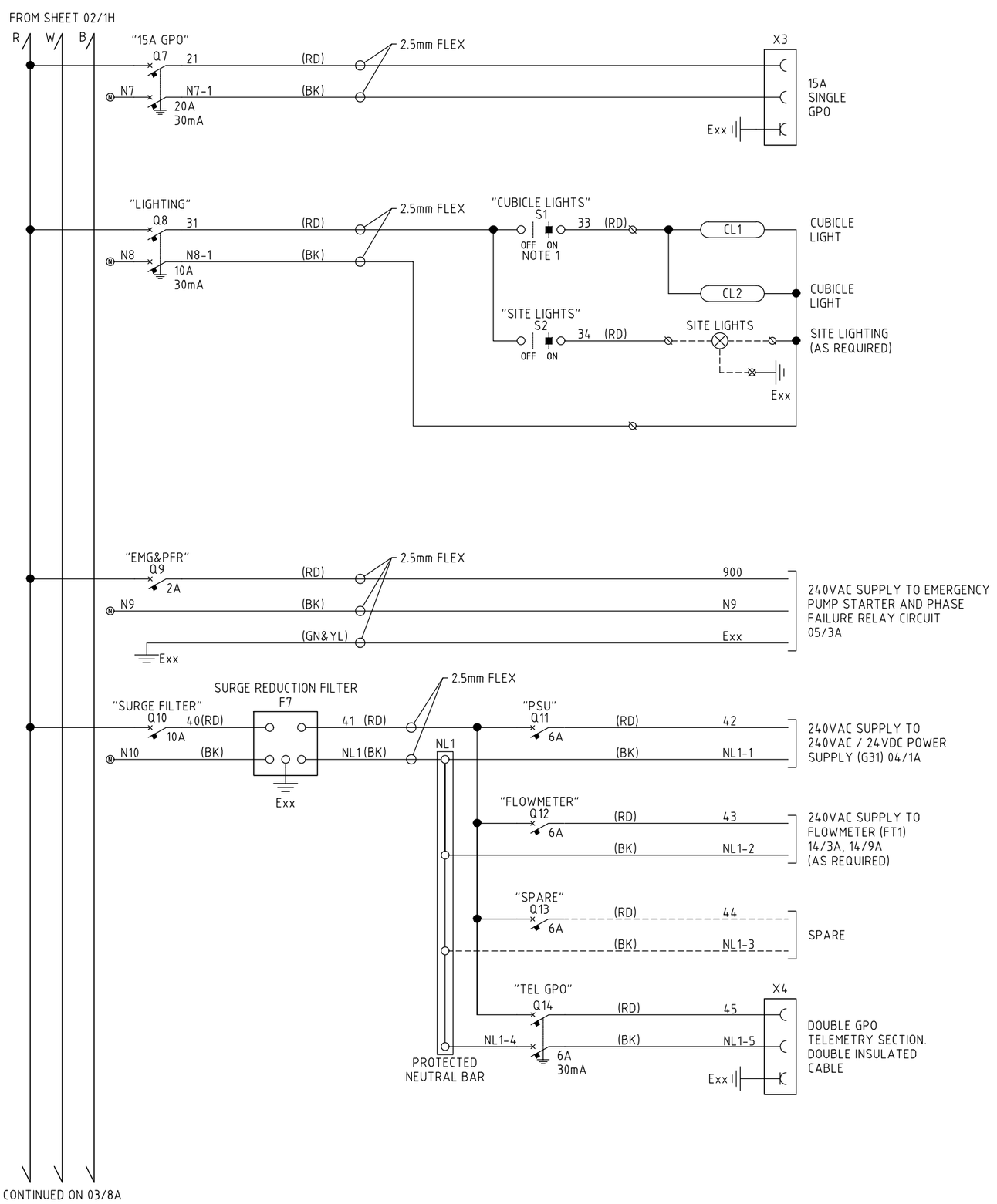

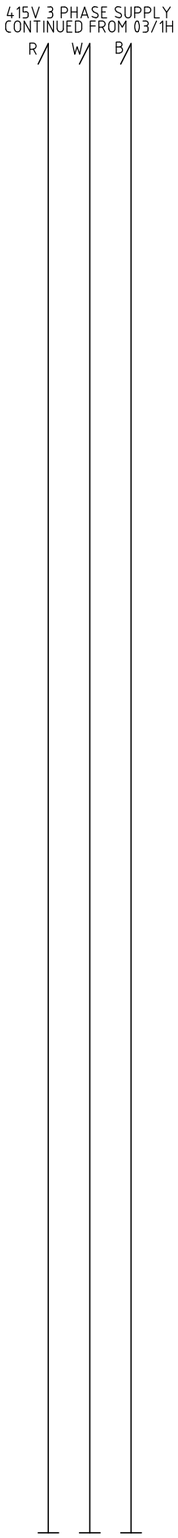

NOTES:
1. SWITCHES TO BE CLIPSAL TYPE.

CONTACT REFERENCES

01/5G
DWG SHT. No. — GRID REFERENCE

LEGEND

⊠	EARTH TERMINAL	○	DEVICE TERMINAL
⊘	THROUGH TERMINAL	⊂⊃	FUSE TERMINAL

A3

INDEX	DATE	REVISIONS	DRAWN	CHECKED	PASSED
0	01.02.22	RENAMED FROM UWSTD-E-SPS-6kW-DOL-003	YV	TGS	TGS

	INITIALS	DATE
DRAWN	A.K	18.02.21
CHECKED	LG	18.02.21
PASSED	JD	18.02.21

Unitywater

IFxxxxxx
SEWAGE PUMPING STATION - 0-6kW DOL
STANDARD DRAWINGS
240VAC POWER SUPPLIES & DISTRIBUTION SCHEMATIC DIAGRAM

SHEET OF SHEETS | SCALE N/A
REVISION DATE 01.02.22 | REVISION 0
DISCIPLINE CODE E
DRAWING NO. UWDSTD-E-DR-8002-03

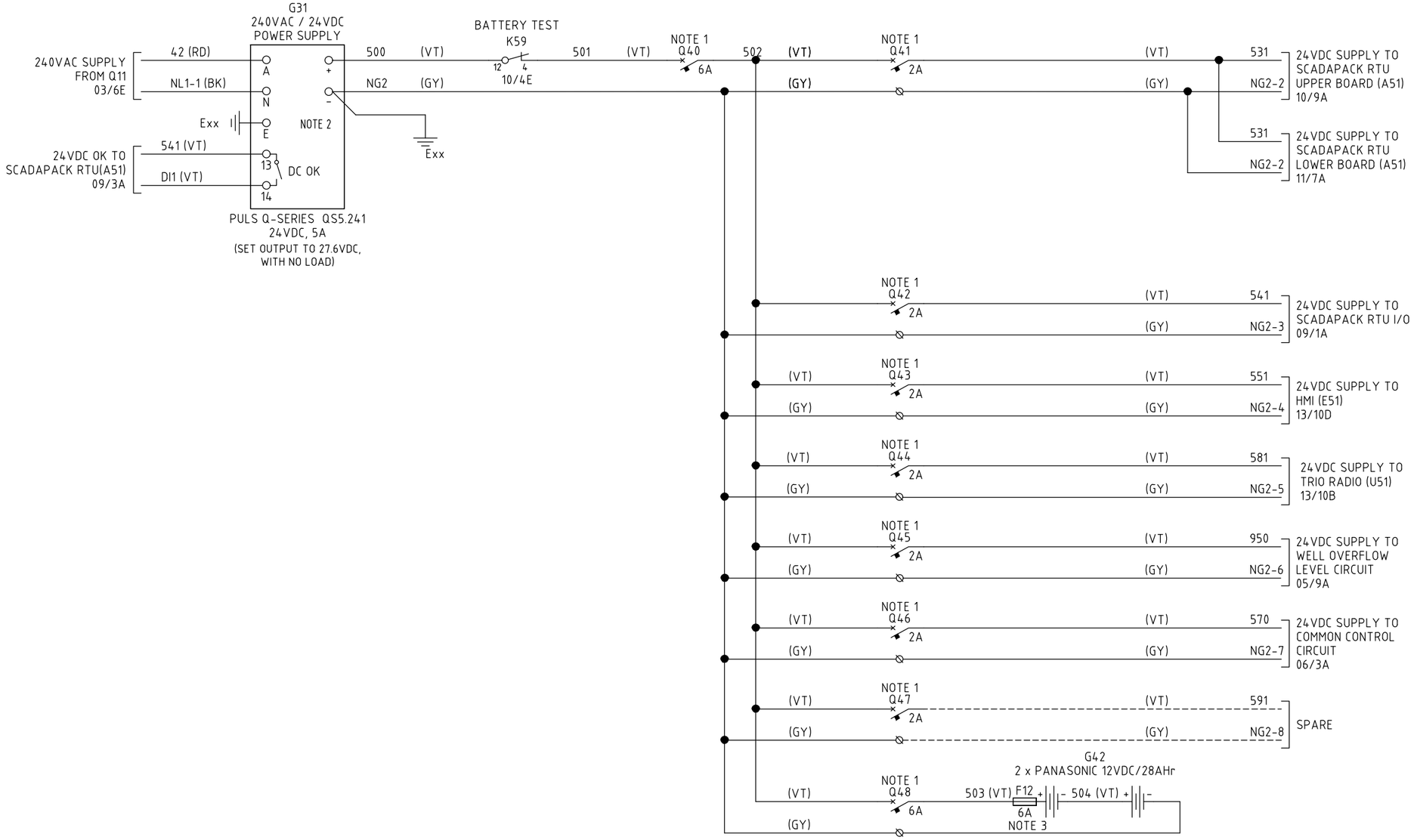

NOTES:

1. DC RATED CIRCUIT BREAKER.
2. POWER SUPPLIES TO BE GROUNDED.
3. INLINE FUSE ON CABLE INSTALLED CLOSE TO BATTERY.
4. 24VDC TO 12VDC CONVERTER (MEANWELL SD-25B-12) IS REQUIRED IF E-SERIES RADIO IS TO BE INSTALLED.

CONTACT REFERENCES

01/5G

DWG SHT. No. — GRID REFERENCE

LEGEND

⊠	EARTH TERMINAL	○	DEVICE TERMINAL
⊘	THROUGH TERMINAL	⊂⊃	FUSE TERMINAL

A3

INDEX	DATE	REVISIONS	DRAWN	CHECKED	PASSED
0	01.02.22	RENAMED FROM UWSTD-E-SPS-6kW-DOL-004	YV	TGS	TGS

	INITIALS	DATE
DRAWN	A.K	18.02.21
CHECKED	LG	18.02.21
PASSED	JD	18.02.21

Unitywater

IFxxxxxx
SEWAGE PUMPING STATION - 0-6kW DOL
STANDARD DRAWINGS
24VDC POWER SUPPLIES SCHEMATIC DIAGRAM

SHEET OF SHEETS | SCALE N/A
REVISION DATE 01.02.22 | REVISION 0
DISCIPLINE CODE E
DRAWING NO.
UWDSTD-E-DR-8002-04

EMERGENCY PUMP STARTER CIRCUIT

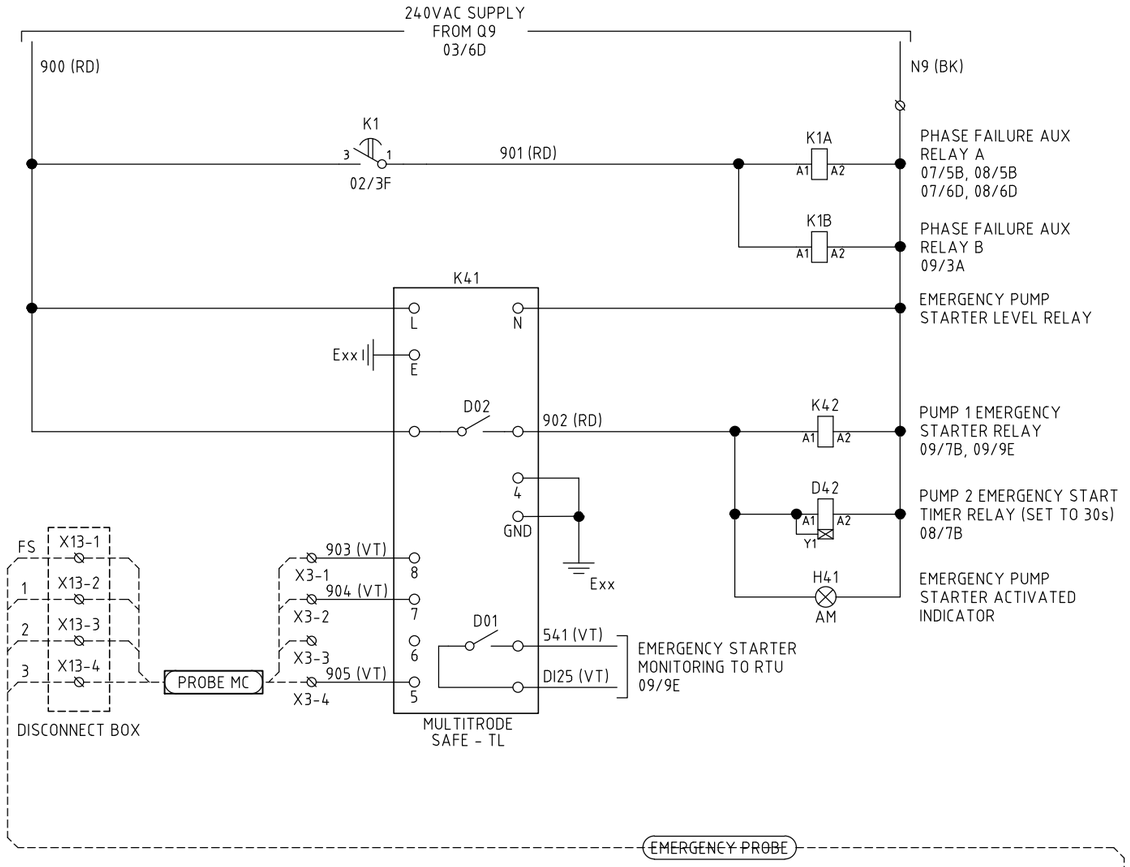

WELL OVERFLOW LEVEL CIRCUIT

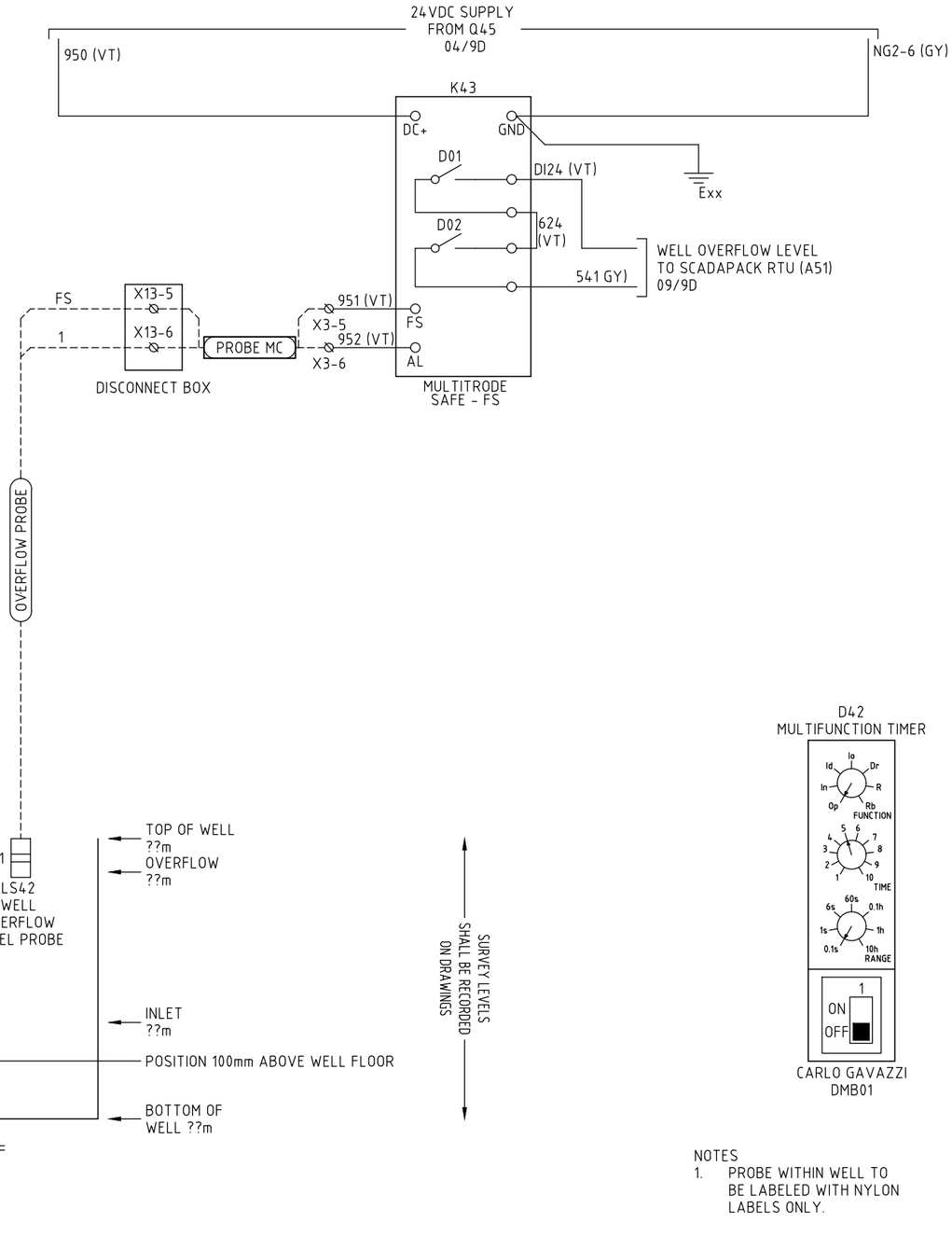

SAFE-TL

ON OFF	DIP SWITCH	SETTING	MODE FUNCTION
■	1	OFF	EMPTY (DISCHARGE) MODE
■	2	OFF	HIGH LEVEL ALARM
■	3	ON	10 SECOND PUMP & ALARM ACTIVATION DELAY
■	4	ON	SEAL FAULT LED ONLY
■	5	OFF	THERMAL
■	6	ON	AUTO THERMAL RESET
■	7	OFF	PROBE SENSITIVITY - 20k OHM
■	8	ON	

SAFE-FS

ON OFF	DIP SWITCH	SETTING	MODE FUNCTION
■	1	OFF	HIGH LEVEL ALARM
■	2	ON	10 SECOND LEVEL ALARM ACTIVATION DELAY
■	3	ON	10 SECOND LEVEL ALARM DEACTIVATION DELAY
■	4	OFF	N/C LEVEL ALARM
■	5	OFF	N/C FAILSAFE PROBE ALARM
■	6	N/A	NOT USED
■	7	OFF	PROBE SENSITIVITY - 20k OHM
■	8	ON	

NOTES
1. PROBE WITHIN WELL TO BE LABELED WITH NYLON LABELS ONLY.

CONTACT REFERENCES

01/5G
DWG SHT. No. — GRID REFERENCE

LEGEND

⊠	EARTH TERMINAL	○	DEVICE TERMINAL
⊘	THROUGH TERMINAL		FUSE TERMINAL

A3

INDEX	DATE	REVISIONS	DRAWN	CHECKED	PASSED
0	01.02.22	RENAMED FROM UWSTD-E-SPS-6kW-DOL-005	YV	TGS	TGS

	INITIALS	DATE
DRAWN	A.K	18.02.21
CHECKED	LG	18.02.21
PASSED	JD	18.02.21

Unitywater

Unitywater
IFxxxxxx
SEWAGE PUMPING STATION - 0-6kW DOL
STANDARD DRAWINGS
EMERGENCY PUMP STARTER & OVERFLOW CIRCUIT SCHEMATIC DIAGRAM

SHEET OF SHEETS | SCALE N/A
REVISION DATE 01.02.22 | REVISION 0
DISCIPLINE CODE E
DRAWING NO.
UWDSTD-E-DR-8002-05

COMMON CONTROL CIRCUITS

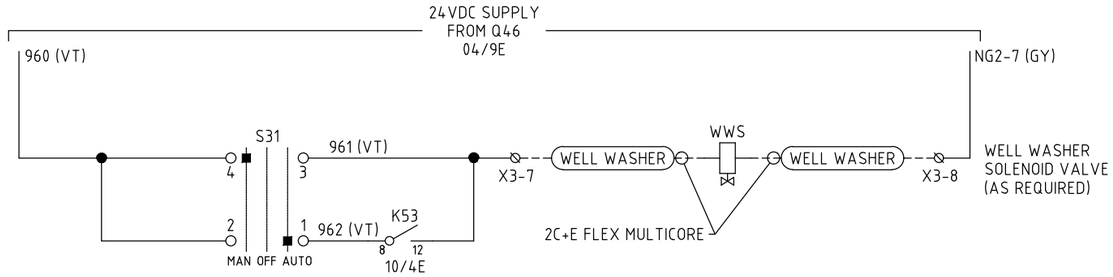

CONTACT REFERENCES

01/5G

DWG SHT. No. — GRID REFERENCE

LEGEND

⊠	EARTH TERMINAL	○	DEVICE TERMINAL
⌀	THROUGH TERMINAL		FUSE TERMINAL

A3

INDEX	DATE	REVISIONS	DRAWN	CHECKED	PASSED
0	01.02.22	RENAMED FROM UWSTD-E-SPS-6kW-DOL-006	YV	TGS	TGS

	INITIALS	DATE
DRAWN	A.K	18.02.21
CHECKED	LG	18.02.21
PASSED	JD	18.02.21

Unitywater

IFxxxxxx
SEWAGE PUMPING STATION - 0-6kW DOL
STANDARD DRAWINGS
COMMON CONTROL CIRCUITS SCHEMATIC DIAGRAM

SHEET OF SHEETS | SCALE N/A
REVISION DATE 01.02.22 | REVISION 0
DISCIPLINE CODE E
DRAWING NO.
UWDSTD-E-DR-8002-06

PUMP 1 CONTROL CIRCUIT

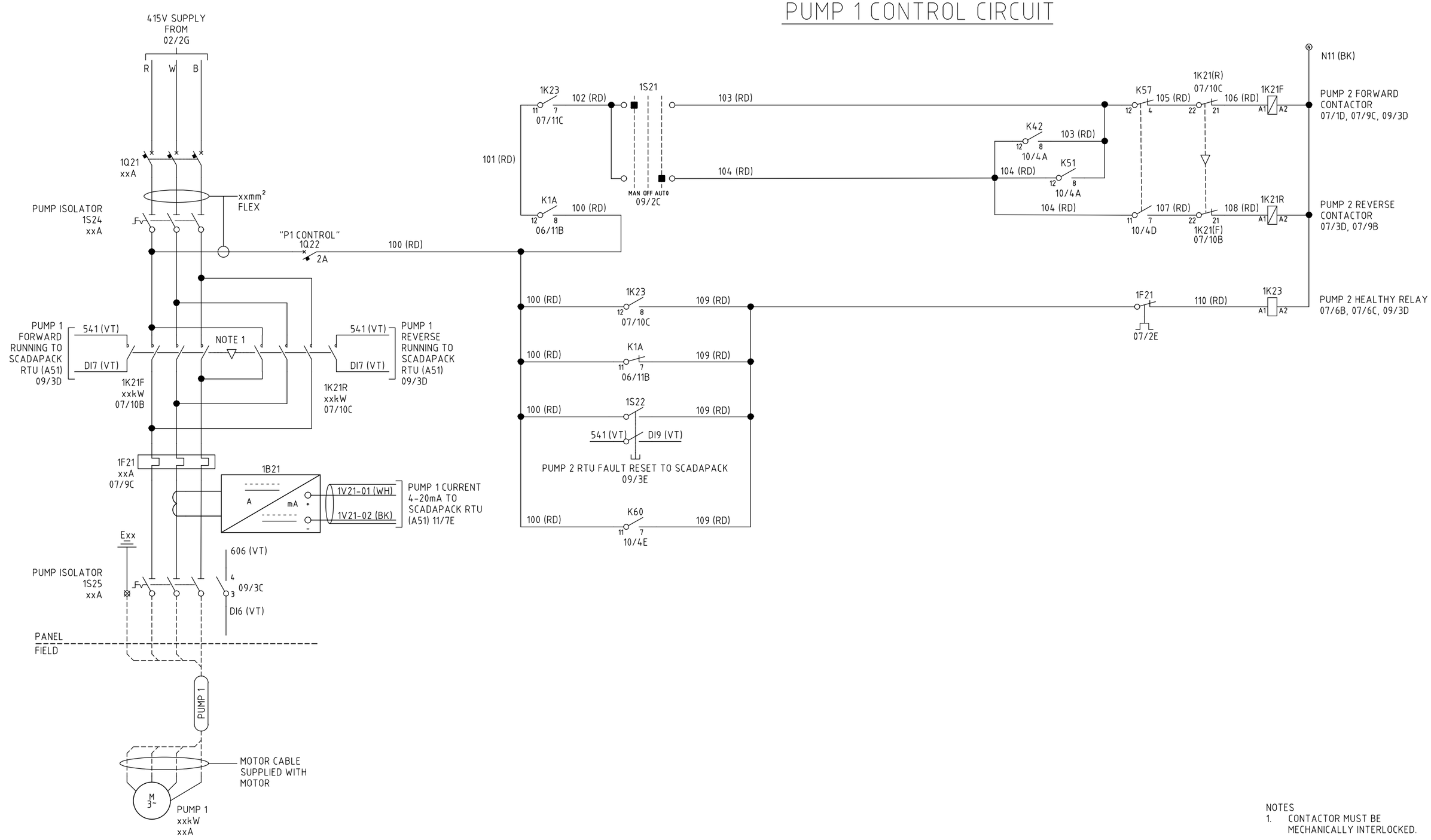

CT AMPERES JUMPER SETTING

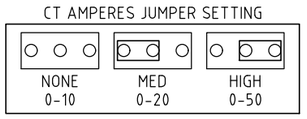

NOTES
1. CONTACTOR MUST BE MECHANICALLY INTERLOCKED.

CONTACT REFERENCES

01/5G
DWG SHT. No. — GRID REFERENCE

LEGEND

⊠	EARTH TERMINAL	○	DEVICE TERMINAL
⊘	THROUGH TERMINAL	○▭	FUSE TERMINAL

A3

INDEX	DATE	REVISIONS	DRAWN	CHECKED	PASSED
0	01.02.22	RENAMED FROM UWSTD-E-SPS-6kW-DOL-007	YV	TGS	TGS

	INITIALS	DATE
DRAWN	A.K	18.02.21
CHECKED	LG	18.02.21
PASSED	JD	18.02.21

Unitywater

IFxxxxxx
SEWAGE PUMPING STATION - 0-6kW DOL
STANDARD DRAWINGS
PUMP 1 POWER AND CONTROL SCHEMATIC DIAGRAM

SHEET OF SHEETS | SCALE N/A
REVISION DATE 01.02.22 | REVISION 0
DISCIPLINE CODE E
DRAWING NO. UWDSTD-E-DR-8002-07

PUMP 2 CONTROL CIRCUIT

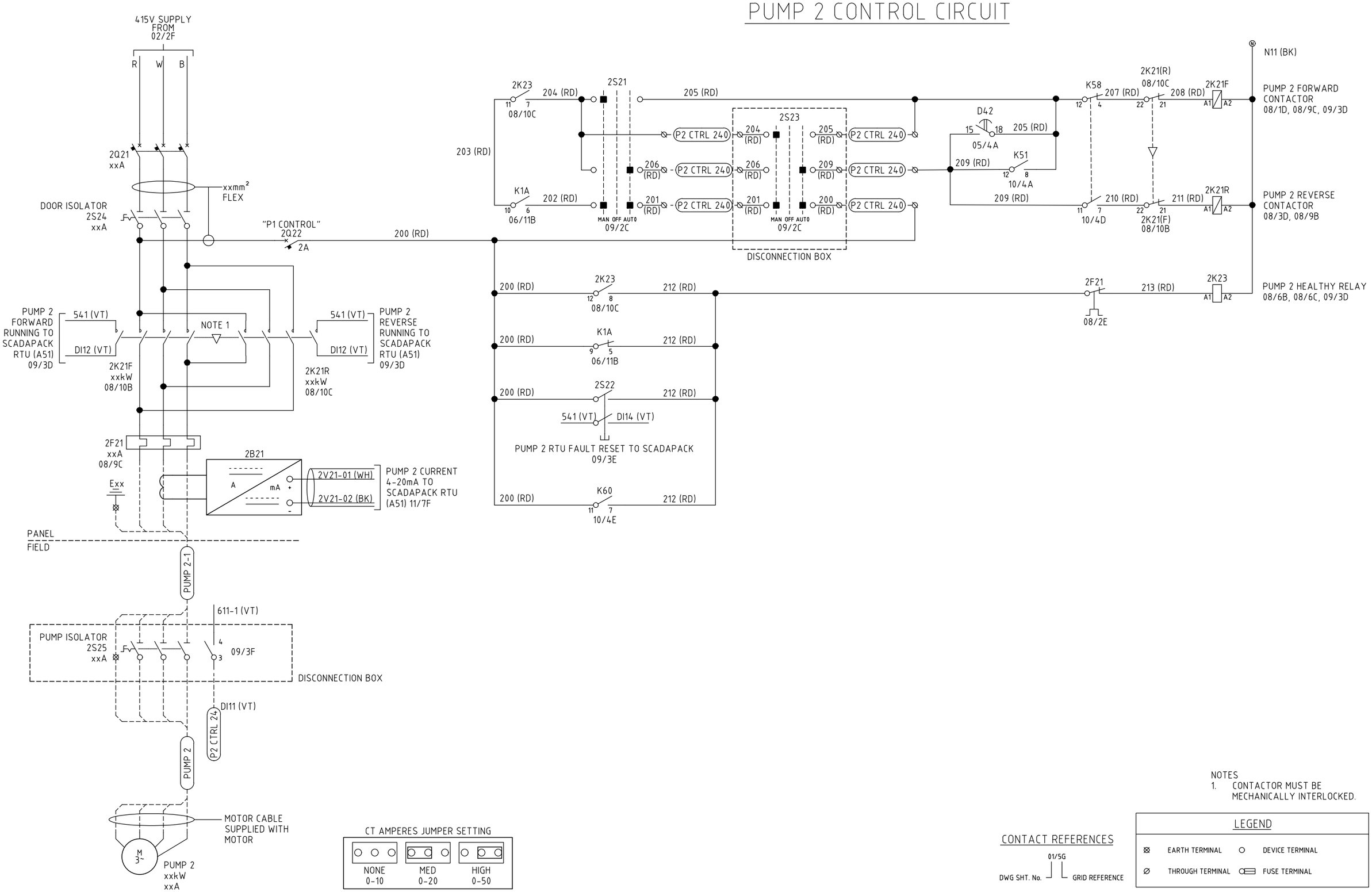

NOTES
1. CONTACTOR MUST BE MECHANICALLY INTERLOCKED.

CONTACT REFERENCES

01/5G
DWG SHT. No. — GRID REFERENCE

LEGEND

⊠	EARTH TERMINAL	○	DEVICE TERMINAL
⊘	THROUGH TERMINAL	○▭	FUSE TERMINAL

A3

INDEX	DATE	REVISIONS	DRAWN	CHECKED	PASSED
0	01.02.22	RENAMED FROM UWSTD-E-SPS-6kW-DOL-008	YV	TGS	TGS

	INITIALS	DATE
DRAWN	A.K	18.02.21
CHECKED	LG	18.02.21
PASSED	JD	18.02.21

Unitywater

IFxxxxxx
SEWAGE PUMPING STATION - 0-6kW DOL
STANDARD DRAWINGS
PUMP 2 POWER AND CONTROL SCHEMATIC DIAGRAM

SHEET OF SHEETS | SCALE N/A
REVISION DATE 01.02.22 | REVISION 0
DISCIPLINE CODE E
DRAWING NO. UWDSTD-E-DR-8002-08

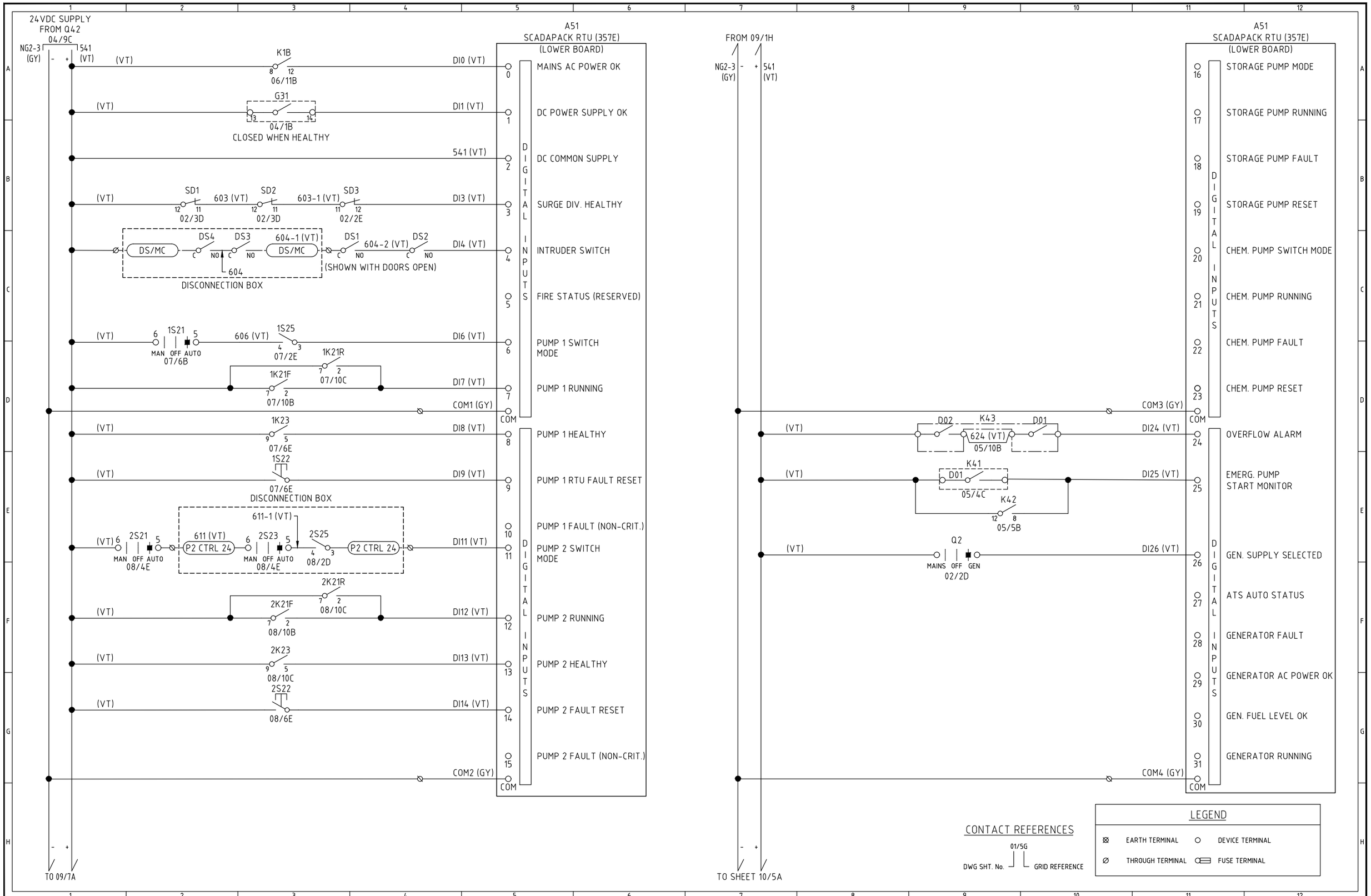

A3

INDEX	DATE	REVISIONS	DRAWN	CHECKED	PASSED
0	01.02.22	RENAMED FROM UWSTD-E-SPS-6kW-DOL-009	YV	TGS	TGS

	INITIALS	DATE
DRAWN	A.K	18.02.21
CHECKED	LG	18.02.21
PASSED	JD	18.02.21

Unitywater

IFxxxxxx

SEWAGE PUMPING STATION - 0-6kW DOL

STANDARD DRAWINGS

SCADAPACK DIGITAL INPUT SCHEMATIC DIAGRAM

SHEET OF SHEETS | SCALE N/A

REVISION DATE 01.02.22 | REVISION 0

DISCIPLINE CODE E

DRAWING NO. UWDSTD-E-DR-8002-09

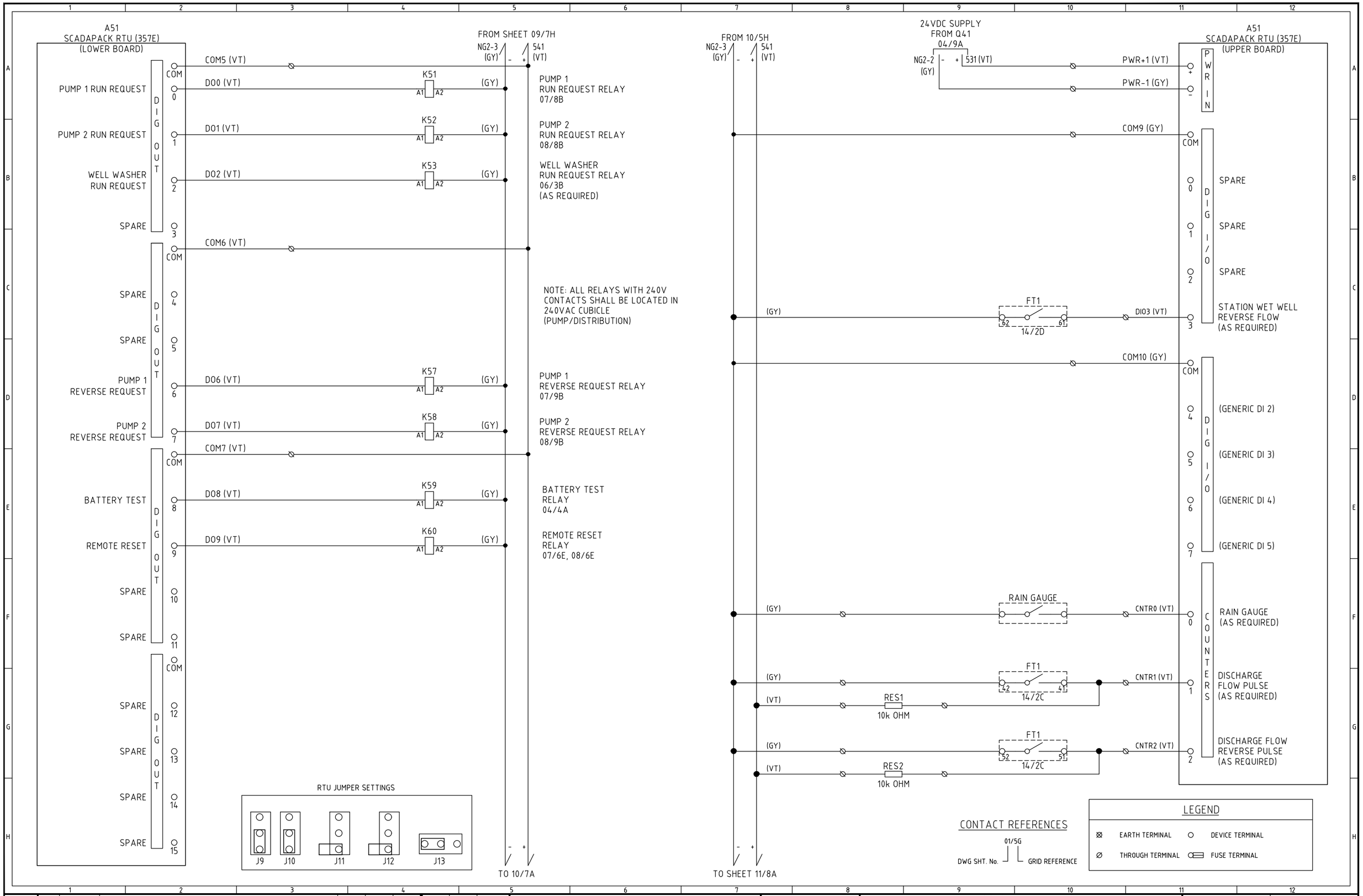

INDEX	DATE	REVISIONS	DRAWN	CHECKED	PASSED
0	01.02.22	RENAMED FROM UWSTD-E-SPS-6kW-DOL-010	YV	TGS	TGS

	INITIALS	DATE
DRAWN	A.K	18.02.21
CHECKED	LG	18.02.21
PASSED	JD	18.02.21

A3

Unitywater

IFxxxxxx

SEWAGE PUMPING STATION - 0-6kW DOL

STANDARD DRAWINGS

SCADAPACK DIGITAL I/O SCHEMATIC DIAGRAM

SHEET OF SHEETS | SCALE N/A

REVISION DATE 01.02.22 | REVISION 0

DISCIPLINE CODE E

DRAWING NO. UWDSTD-E-DR-8002-10

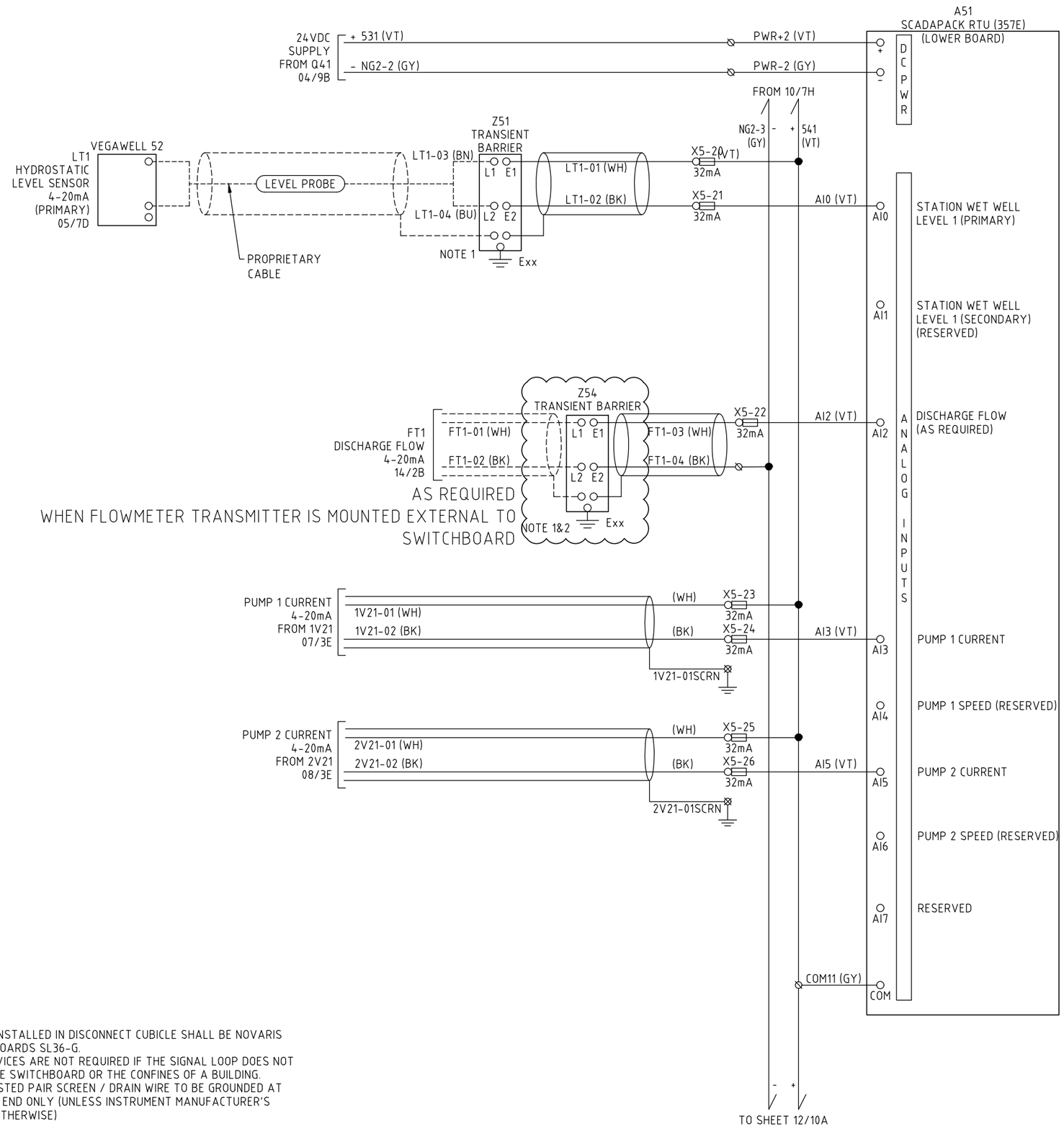

CONTACT REFERENCES

01/5G
DWG SHT. No. — GRID REFERENCE

LEGEND

⊠	EARTH TERMINAL	○	DEVICE TERMINAL
⊘	THROUGH TERMINAL	▭	FUSE TERMINAL

NOTES
1. TRANSIENT BARRIERS INSTALLED IN DISCONNECT CUBICLE SHALL BE NOVARIS SL36-EC90, IN SWITCHBOARDS SL36-G.
2. SURGE PROTECTION DEVICES ARE NOT REQUIRED IF THE SIGNAL LOOP DOES NOT EXTEND OUTSIDE OF THE SWITCHBOARD OR THE CONFINES OF A BUILDING.
3. INSTRUMENTATION TWISTED PAIR SCREEN / DRAIN WIRE TO BE GROUNDED AT TELEMETRY / CONTROL END ONLY (UNLESS INSTRUMENT MANUFACTURER'S INSTRUCTIONS STATE OTHERWISE)

A3

INDEX	DATE	REVISIONS	DRAWN	CHECKED	PASSED
0	01.02.22	RENAMED FROM UWSTD-E-SPS-6kW-DOL-011	YV	TGS	TGS

	INITIALS	DATE
DRAWN	A.K	18.02.21
CHECKED	LG	18.02.21
PASSED	JD	18.02.21

Unitywater

Unitywater
IFxxxxxx
SEWAGE PUMPING STATION - 0-6kW DOL
STANDARD DRAWINGS
SCADAPACK ANALOGUE INPUT SCHEMATIC DIAGRAM

SHEET OF SHEETS	SCALE N/A
REVISION DATE 01.02.22	REVISION 0
DISCIPLINE CODE E	
DRAWING NO. UWDSTD-E-DR-8002-11	

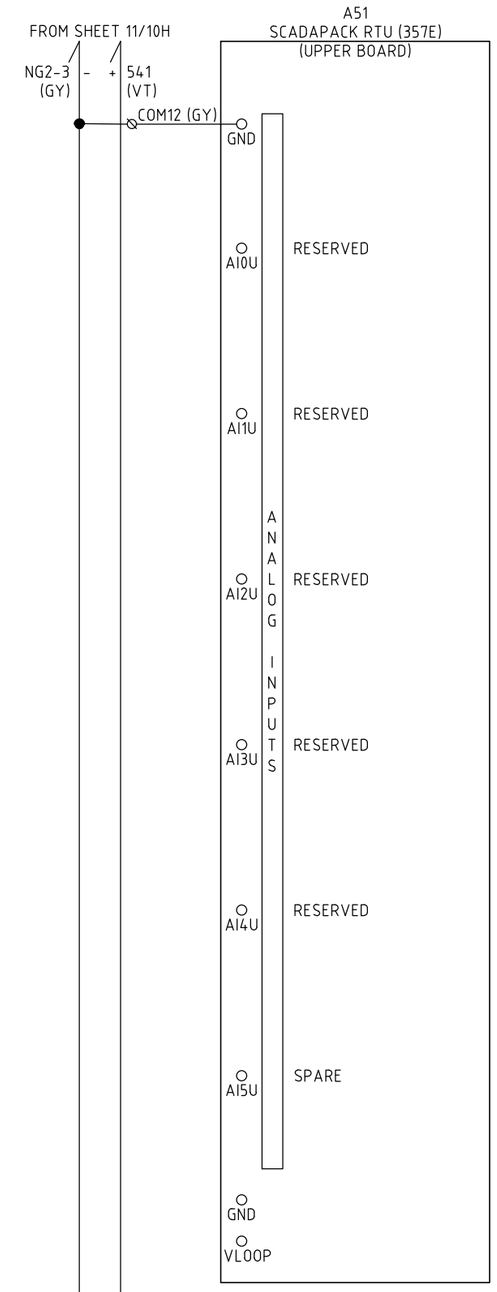

CONTACT REFERENCES

01/5G

DWG SHT. No. — GRID REFERENCE

LEGEND			
⊠	EARTH TERMINAL	○	DEVICE TERMINAL
⌀	THROUGH TERMINAL	⊂⊃	FUSE TERMINAL

NOTES

1. TRANSIENT BARRIERS INSTALLED IN DISCONNECT CUBICLE SHALL BE NOVARIS SL36-EC90, IN SWITCHBOARDS SL36-G.
2. SURGE PROTECTION DEVICES ARE NOT REQUIRED IF THE SIGNAL LOOP DOES NOT EXTEND OUTSIDE OF THE SWITCHBOARD OR THE CONFINES OF A BUILDING.
3. INSTRUMENTATION TWISTED PAIR SCREEN / DRAIN WIRE TO BE GROUNDED AT TELEMETRY / CONTROL END ONLY (UNLESS INSTRUMENT MANUFACTURER'S INSTRUCTIONS STATE OTHERWISE)

A3

INDEX	DATE	REVISIONS	DRAWN	CHECKED	PASSED
0	01.02.22	RENAMED FROM UWSTD-E-SPS-6kW-DOL-012	YV	TGS	TGS

	INITIALS	DATE
DRAWN	A.K	18.02.21
CHECKED	LG	18.02.21
PASSED	JD	18.02.21

Unitywater

Unitywater

IFxxxxxx

SEWAGE PUMPING STATION - 0-6kW DOL

STANDARD DRAWINGS

SPARE

SHEET OF SHEETS | SCALE N/A

REVISION DATE 01.02.22 | REVISION 0

DISCIPLINE CODE E

DRAWING NO.

UWDSTD-E-DR-8002-12

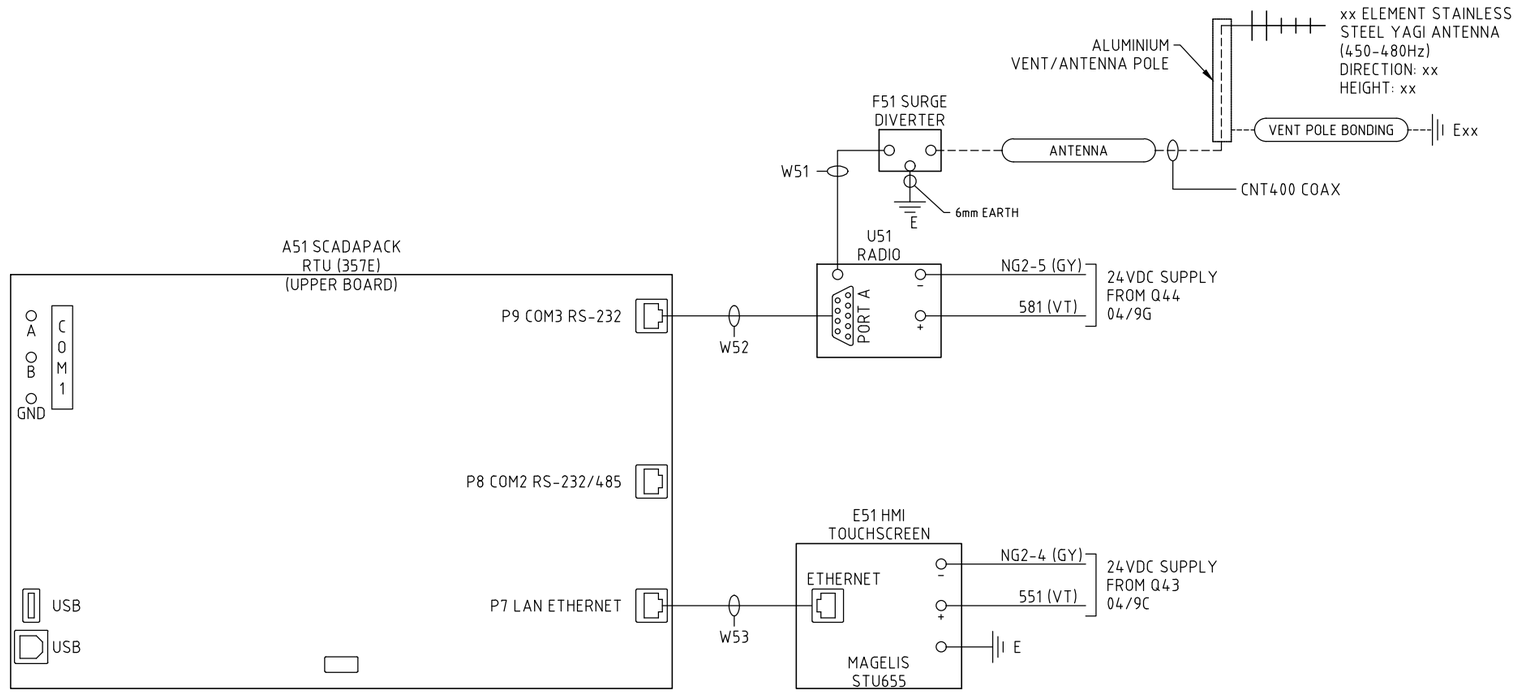

CONTACT REFERENCES

01/5G

DWG SHT. No. — GRID REFERENCE

LEGEND

⊠	EARTH TERMINAL	○	DEVICE TERMINAL
⊘	THROUGH TERMINAL		FUSE TERMINAL

A3

INDEX	DATE	REVISIONS	DRAWN	CHECKED	PASSED
0	01.02.22	RENAMED FROM UWSTD-E-SPS-6kW-DOL-013	YV	TGS	TGS

	INITIALS	DATE
DRAWN	A.K	18.02.21
CHECKED	LG	18.02.21
PASSED	JD	18.02.21

Unitywater

IFxxxxxx

SEWAGE PUMPING STATION - 0-6kW DOL

STANDARD DRAWINGS

SCADAPACK COMMUNICATIONS SCHEMATIC DIAGRAM

SHEET OF SHEETS | SCALE N/A

REVISION DATE 01.02.22 | REVISION 0

DISCIPLINE CODE E

DRAWING NO. UWDSTD-E-DR-8002-13

FLOWMETER CONTROL CIRCUIT

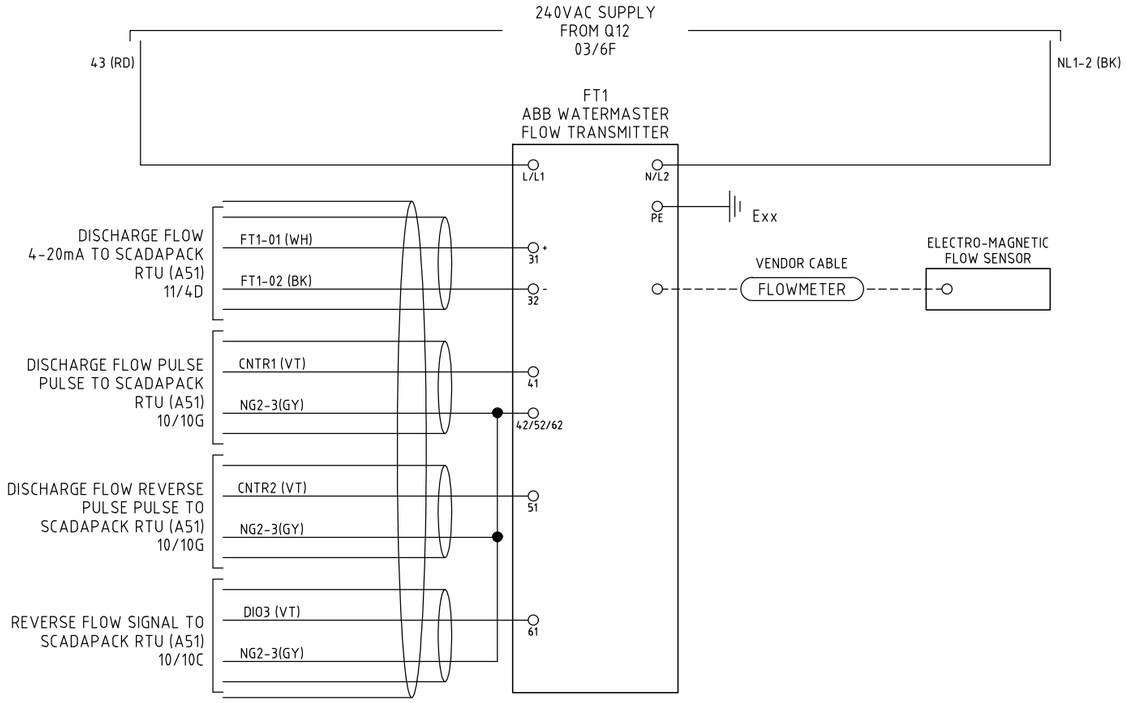

FLOWMETER CONTROL CIRCUIT

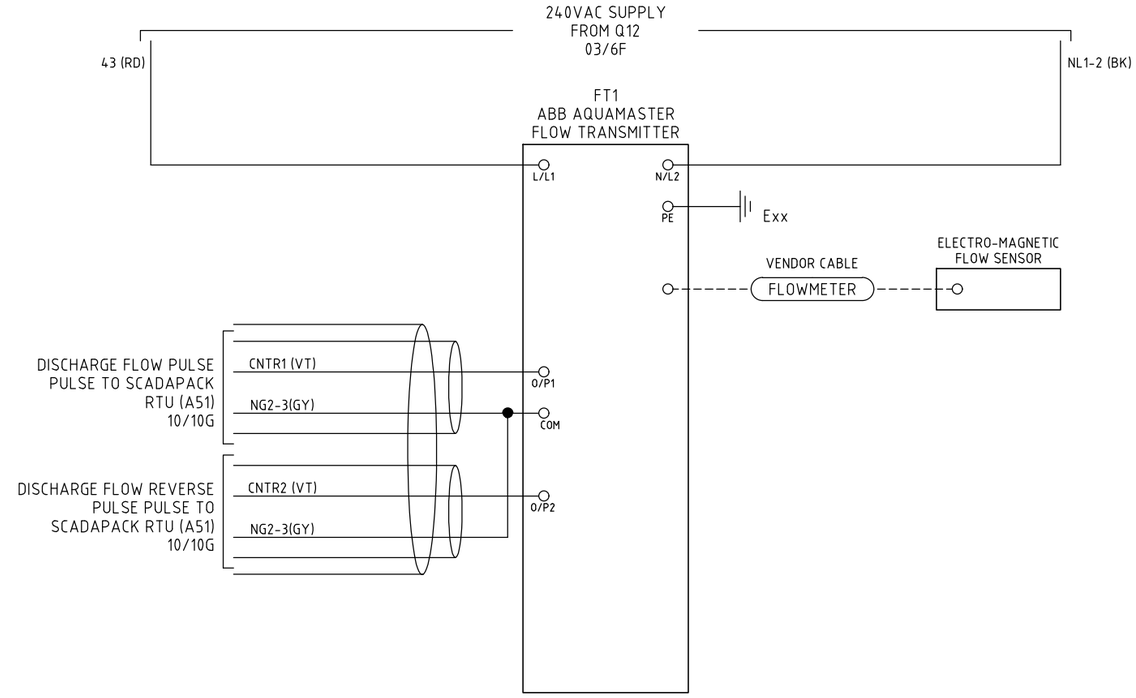

CONTACT REFERENCES

01/5G

DWG SHT. No. — GRID REFERENCE

LEGEND

⊠	EARTH TERMINAL	○	DEVICE TERMINAL
∅	THROUGH TERMINAL		FUSE TERMINAL

A3

INDEX	DATE	REVISIONS	DRAWN	CHECKED	PASSED
0	01.02.22	RENAMED FROM UWSTD-E-SPS-6kW-DOL-014	YV	TGS	TGS

	INITIALS	DATE
DRAWN	A.K	18.02.21
CHECKED	LG	18.02.21
PASSED	JD	18.02.21

Unitywater

IFxxxxxx
SEWAGE PUMPING STATION - 0-6kW DOL
STANDARD DRAWINGS
SPARE

SHEET OF SHEETS | SCALE N/A
REVISION DATE 01.02.22 | REVISION 0
DISCIPLINE CODE E
DRAWING NO.
UWDSTD-E-DR-8002-14

EQUIPMENT SCHEDULE

CONTACT REFERENCES

01/5G

DWG SHT. No. — GRID REFERENCE

LEGEND			
⊠	EARTH TERMINAL	○	DEVICE TERMINAL
Ø	THROUGH TERMINAL		FUSE TERMINAL

A3

INDEX	DATE	REVISIONS	DRAWN	CHECKED	PASSED
0	01.02.22	RENAMED FROM UWSTD-E-SPS-6kW-DOL-015	YV	TGS	TGS

	INITIALS	DATE
DRAWN	A.K	18.02.21
CHECKED	LG	18.02.21
PASSED	JD	18.02.21

Unitywater

Unitywater

IFxxxxxx

SEWAGE PUMPING STATION - 0-6kW DOL

STANDARD DRAWINGS

EQUIPMENT SCHEDULE

SHEET OF SHEETS		SCALE N/A	
REVISION DATE	01.02.22	REVISION	0
DISCIPLINE CODE	E		
DRAWING NO.	UWDSTD-E-DR-8002-15		

CABLE SCHEDULE

STATUS	FROM	FROM EQUIPMENT TAG	TO	TO EQUIPMENT TAG	CABLE SIZE	SHEATH/INSULATION/ COLOUR/SHAPE	CORES	TYPE	VOLTAGE	Designation	Label	Distance (Approx)	Supplied By:	Installed By:	Notes
	Pole/Pillar		MSB	X1	≥16mm	Orange circ	4c+e	Power	415VAC	Mains	Mains				
	Earth Pit		MSB	Main Earth Bar	≥6mm	Earth	1c	Earth		Mains - Earth	Mains - E				
	Wet Well	LS41	MSB	K41				Instrumentation		Emergency Pump Starter Probe	Emergency Probe				This is the probe cable
	Wet Well	LT1	MSB	Z51				Instrumentation		Primary Level Sensor	Level Probe				This is the sensor cable
	Wet Well	LS42	MSB	K43				Instrumentation		Overflow Probe	Overflow Probe				This is the probe cable
	MSB	1S25	Wet Well	Pump 1				Power	415VAC	Pump 1 Motor Cable	Pump 1				
	MSB	2S25	Disco Box	2S25				Power	415VAC	Pump 2 Motor Cable	Pump 2-1				
	Disco Box	2S25	Wet Well	Pump 2				Power	415VAC	Pump 2 Motor Cable	Pump 2				
	MSB	2S21	Disco Box	2S23		Orange circ	6c+e	Instrumentation	240VAC	Pump 2 Mode	P2 ctrl 240				
	MSB	A51	Disco Box	2S25		Orange circ	2c+e	Instrumentation	24VDC	Pump 2 Mode	P2 ctrl 24				
	MSB	F51	Antenna			CNT400		Antenna Coax		Antenna Coax	Antenna				
	MSB	Earth bar	Vent Pole		6mm	Earth	1c	Earth		Vent Pole Bonding	Vent Pole Bonding				
	MSB		Well Washer	WWS	1.5mm	Orange circ	2c	24vdc Power		Well Washer	Well Washer				As required
	MSB	S1	Site Lights		2.5mm	Orange circ	2c+e	Power	240VAC	Site Lights	Site Lights				As required

NOTES
1. 24VDC INSTRUMENTATION CABLES THAT RUN TO THE DISCONNECTION BOX FROM THE MSB MAY BE ONE INDIVIDUAL AND OVERALL SCREENED INSTROLEX/DEKRON AT ELECTRICAL CONTRACTOR DISCRETION.

CONTACT REFERENCES

01/5G
DWG SHT. No. — GRID REFERENCE

LEGEND

⊠	EARTH TERMINAL	○	DEVICE TERMINAL
⊘	THROUGH TERMINAL		FUSE TERMINAL

A3

INDEX	DATE	REVISIONS	DRAWN	CHECKED	PASSED
0	01.02.22	RENAMED FROM UWSTD-E-SPS-6kW-DOL-016	YV	TGS	TGS

	INITIALS	DATE
DRAWN	A.K	18.02.21
CHECKED	LG	18.02.21
PASSED	JD	18.02.21

Unitywater

Unitywater
IFxxxxxx
SEWAGE PUMPING STATION - 0-6kW DOL
STANDARD DRAWINGS
CABLE SCHEDULE

SHEET OF SHEETS | SCALE N/A
REVISION DATE 01.02.22 | REVISION 0
DISCIPLINE CODE E
DRAWING NO. UWDSTD-E-DR-8002-16

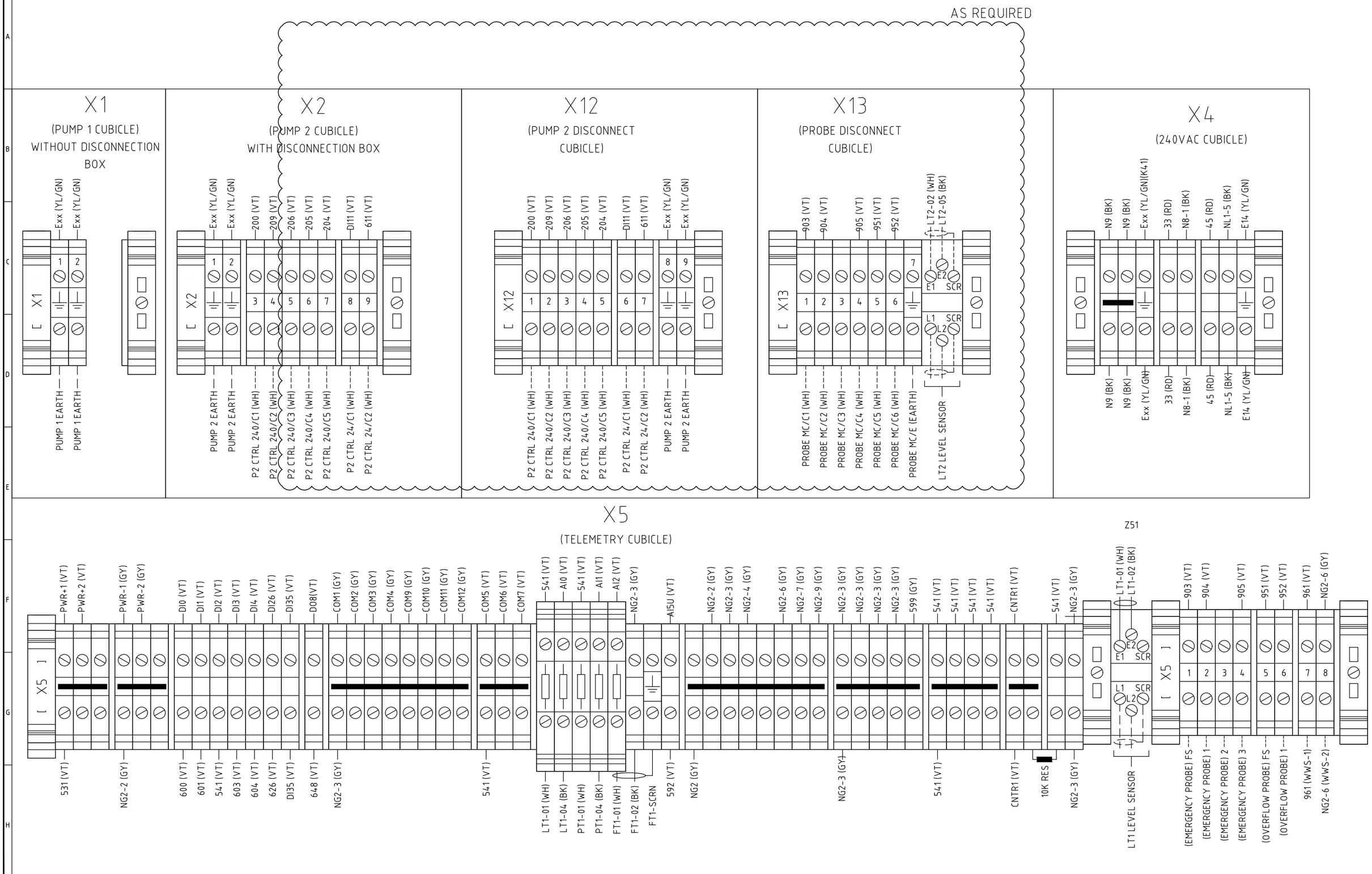

A3

INDEX	DATE	REVISIONS	DRAWN	CHECKED	PASSED
0	01.02.22	RENAMED FROM UWSTD-E-SPS-6kW-DOL-017	YV	TGS	TGS

	INITIALS	DATE
DRAWN	A.K	18.02.21
CHECKED	LG	18.02.21
PASSED	JD	18.02.21

Unitywater

Unitywater
IFxxxxxx
SEWAGE PUMPING STATION - 0-6kW DOL
STANDARD DRAWINGS
TERMINAL LAYOUT

SHEET OF SHEETS | SCALE N/A
REVISION DATE 01.02.22 | REVISION 0
DISCIPLINE CODE E
DRAWING NO.
UWDSTD-E-DR-8002-17

ALTERNATE PHASE FAILURE RELAY

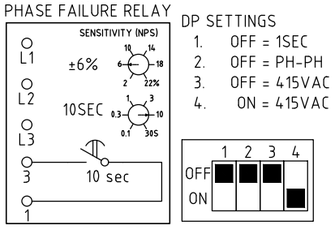

DP SETTINGS
1. OFF = 1SEC
2. OFF = PH-PH
3. OFF = 415VAC
4. ON = 415VAC

SIGNAL ISOLATOR EXAMPLE

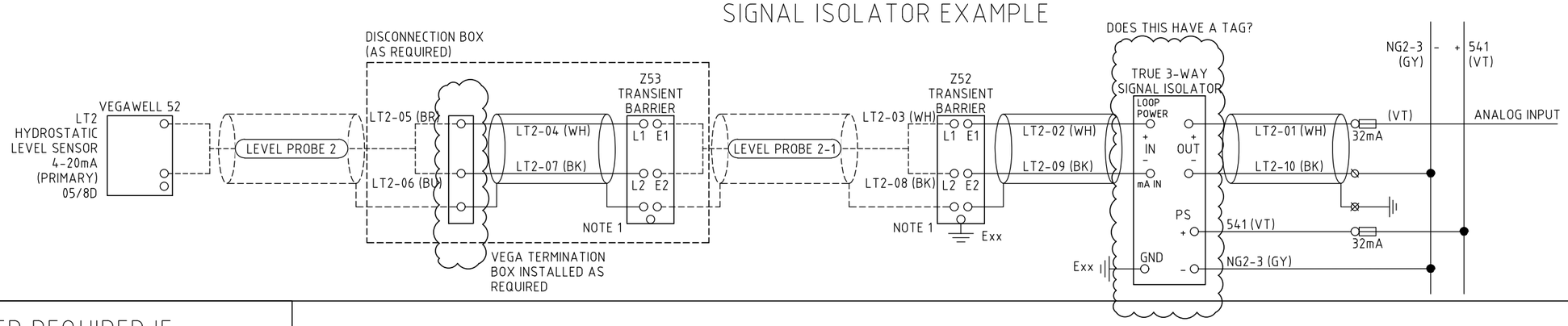

24VDC TO 12VDC CONVERTER REQUIRED IF E-SERIES RADIO IS TO BE INSTALLED

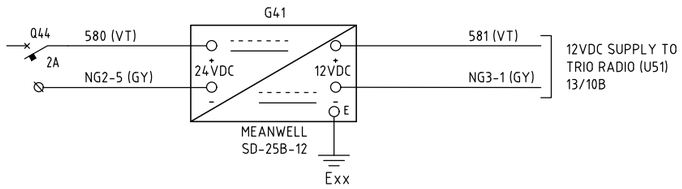

CONTACT REFERENCES

01/5G
DWG SHT. No. — GRID REFERENCE

LEGEND

⊠	EARTH TERMINAL	○	DEVICE TERMINAL
∅	THROUGH TERMINAL		FUSE TERMINAL

NOTES
1. TRANSIENT BARRIERS INSTALLED IN DISCONNECT CUBICLE SHALL BE NOVARIS SL36-EC90, IN SWITCHBOARDS SL36-G.
2. SURGE PROTECTION DEVICES ARE NOT REQUIRED IF THE SIGNAL LOOP DOES NOT EXTEND OUTSIDE OF THE SWITCHBOARD OR THE CONFINES OF A BUILDING.
3. INSTRUMENTATION TWISTED PAIR SCREEN / DRAIN WIRE TO BE GROUNDED AT TELEMETRY / CONTROL END ONLY (UNLESS INSTRUMENT MANUFACTURER'S INSTRUCTIONS STATE OTHERWISE)

A3

INDEX	DATE	REVISIONS	DRAWN	CHECKED	PASSED
0	01.02.22	RENAMED FROM UWSTD-E-SPS-6kW-DOL-020	YV	TGS	TGS

	INITIALS	DATE
DRAWN	A.K	18.02.21
CHECKED	LG	18.02.21
PASSED	JD	18.02.21

Unitywater

IFxxxxxx
SEWAGE PUMPING STATION - 0-6kW DOL
STANDARD DRAWINGS
ALTERNATE EQUIPMENT

SHEET OF SHEETS | SCALE N/A
REVISION DATE 01.02.22 | REVISION 0
DISCIPLINE CODE E
DRAWING NO. UWDSTD-E-DR-8002-20

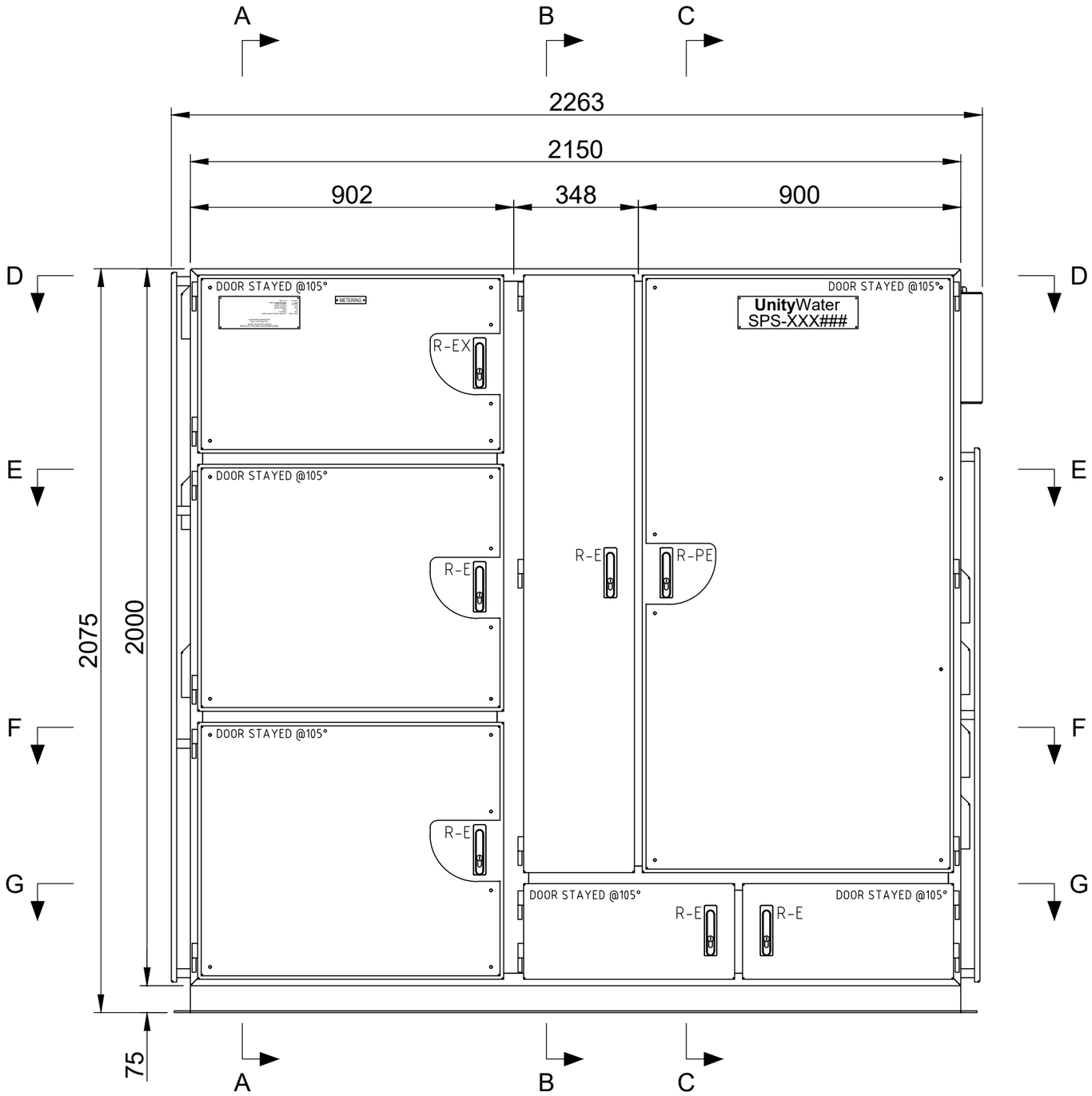

DOOR VIEW
(HOOD REMOVED)

NOTES
1. DEPENDING ON SITE REQUIREMENTS SWITCHBOARD MAY BE MIRRORED TO SUIT
2. DRAWING LAYOUT IS INDICATIVE ONLY. FINIAL DESIGN TO BE APPROVED BY UNITYWATER

A3

INDEX	DATE	REVISIONS	DRAWN	CHECKED	PASSED
0	01.02.22	RENAMED FROM UWSTD-E-SPS-6kW-DOL-030	YV	TGS	TGS

	INITIALS	DATE
DRAWN	A.K	18.02.21
CHECKED	LG	18.02.21
PASSED	JD	18.02.21

Unitywater

IFxxxxxx
SEWAGE PUMPING STATION - 0-6kW DOL
STANDARD DRAWINGS
ELECTRICAL SWITCHBOARD - GENERAL ARRANGEMENT Sht 1 of 5

SHEET OF SHEETS | SCALE N/A
REVISION DATE 01.02.22 | REVISION 0
DISCIPLINE CODE E
DRAWING NO.
UWDSTD-E-DR-8002-30

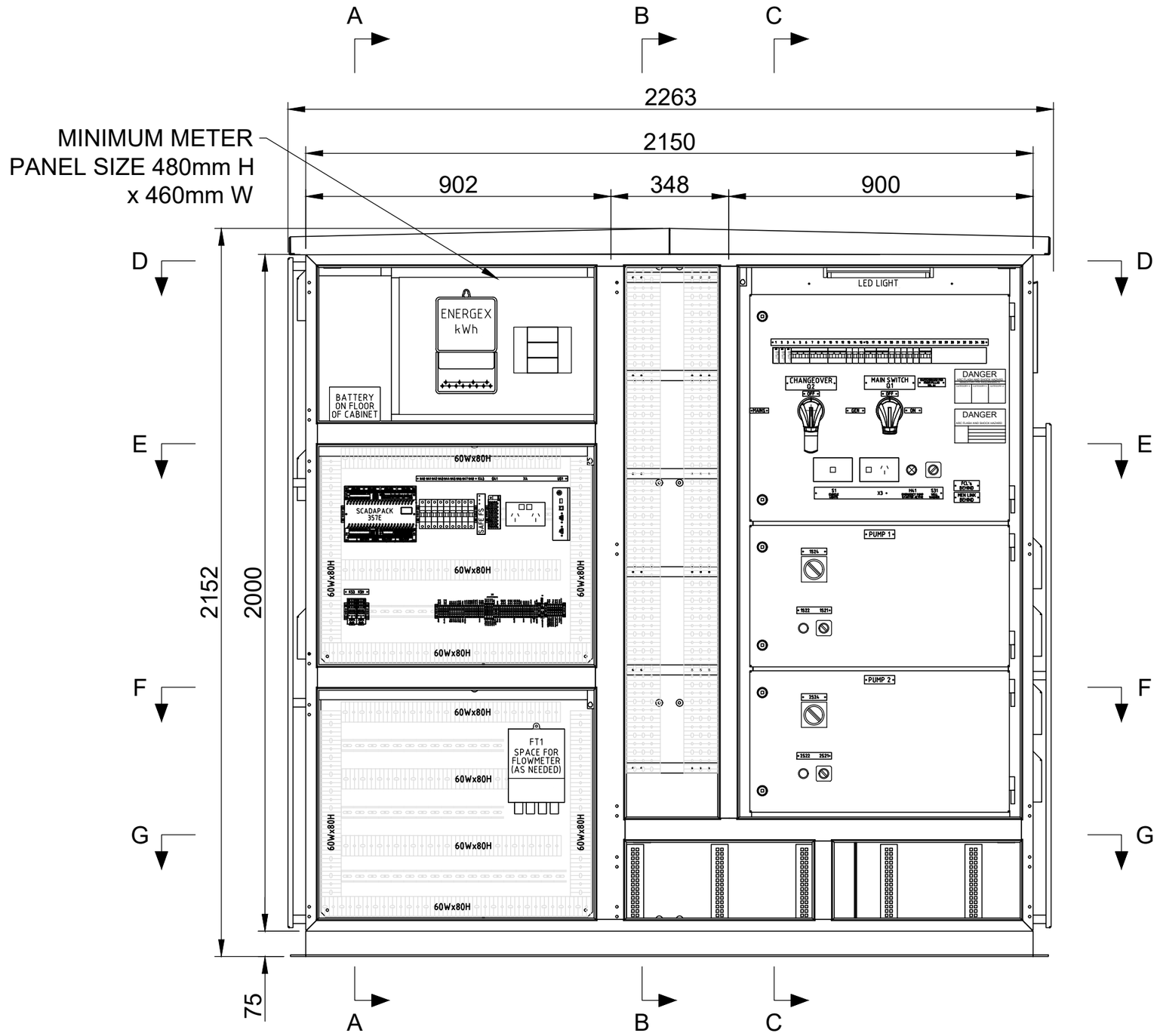

ESCUTCHEON VIEW

NOTES
1. DEPENDING ON SITE REQUIREMENTS SWITCHBOARD MAY BE MIRRORED TO SUIT
2. DRAWING LAYOUT IS INDICATIVE ONLY. FINIAL DESIGN TO BE APPROVED BY UNITYWATER

A3

INDEX	DATE	REVISIONS	DRAWN	CHECKED	PASSED
0	01.02.22	RENAMED FROM UWSTD-E-SPS-6kW-DOL-031	YV	TGS	TGS

	INITIALS	DATE
DRAWN	A.K	18.02.21
CHECKED	LG	18.02.21
PASSED	JD	18.02.21

Unitywater

Unitywater
IFxxxxxx
SEWAGE PUMPING STATION - 0-6kW DOL
STANDARD DRAWINGS
ELECTRICAL SWITCHBOARD - GENERAL ARRANGEMENT Sht 2 of 5

SHEET OF SHEETS | SCALE N/A
REVISION DATE 01.02.22 | REVISION 0
DISCIPLINE CODE E
DRAWING NO.
UWDSTD-E-DR-8002-31

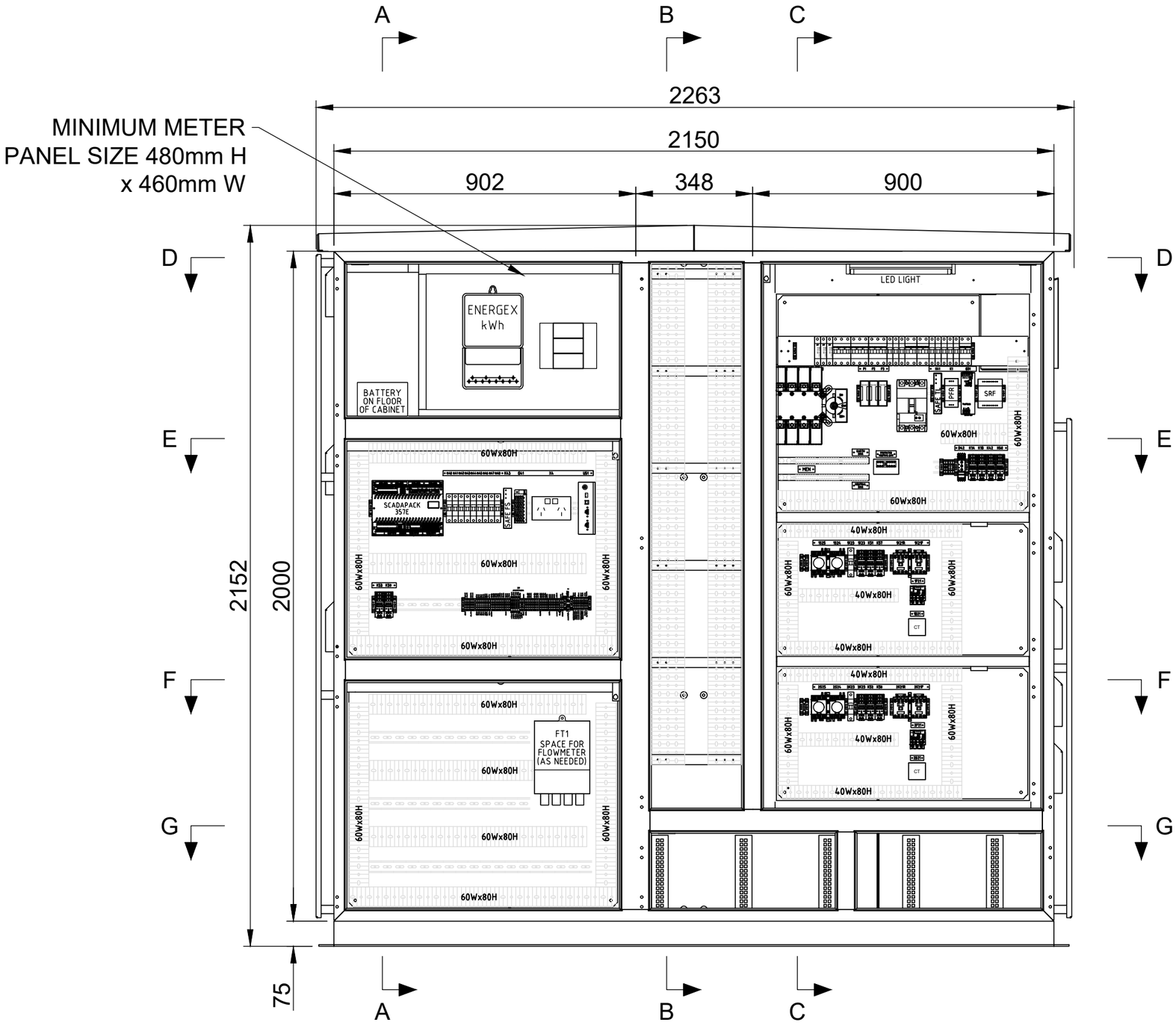

FRONT VIEW

NOTES
1. DEPENDING ON SITE REQUIREMENTS SWITCHBOARD MAY BE MIRRORED TO SUIT
2. DRAWING LAYOUT IS INDICATIVE ONLY. FINIAL DESIGN TO BE APPROVED BY UNITYWATER

A3

INDEX	DATE	REVISIONS	DRAWN	CHECKED	PASSED
0	01.02.22	RENAMED FROM UWSTD-E-SPS-6kW-DOL-032	YV	TGS	TGS

	INITIALS	DATE
DRAWN	A.K	18.02.21
CHECKED	LG	18.02.21
PASSED	JD	18.02.21

Unitywater

Unitywater
IFxxxxxx
SEWAGE PUMPING STATION - 0-6kW DOL
STANDARD DRAWINGS
ELECTRICAL SWITCHBOARD - GENERAL ARRANGEMENT Sht 3 of 5

SHEET OF SHEETS | SCALE N/A
REVISION DATE 01.02.22 | REVISION 0
DISCIPLINE CODE E
DRAWING NO.
UWDSTD-E-DR-8002-32

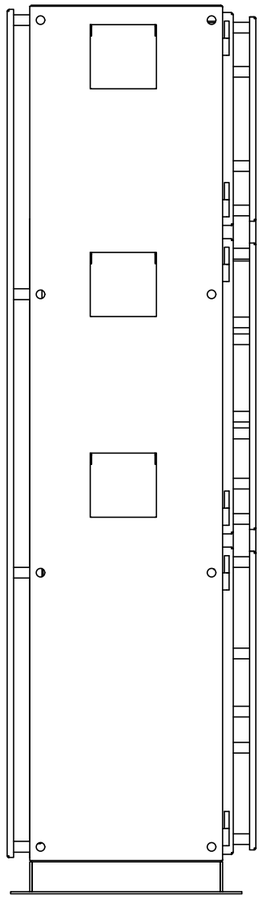

LEFT SIDE VIEW

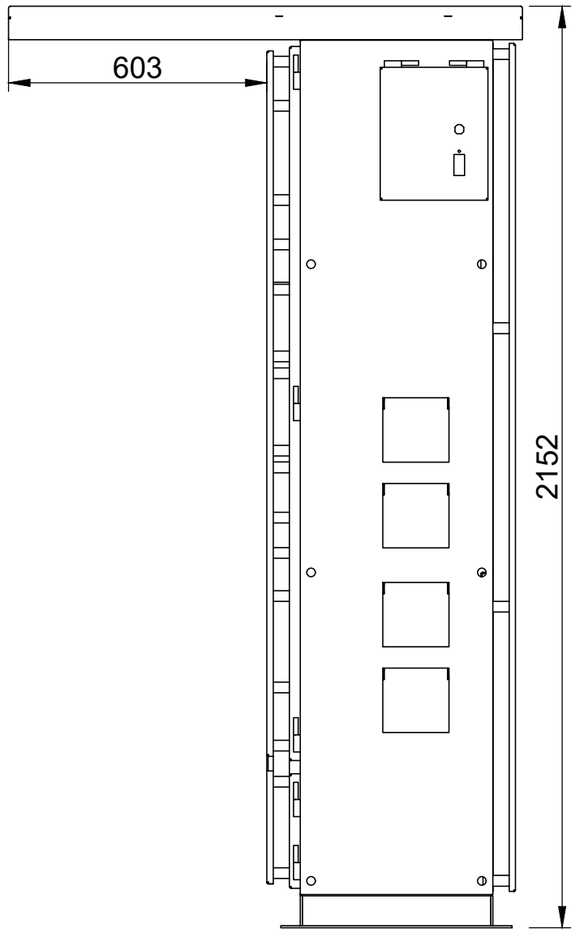

RIGHT SIDE VIEW

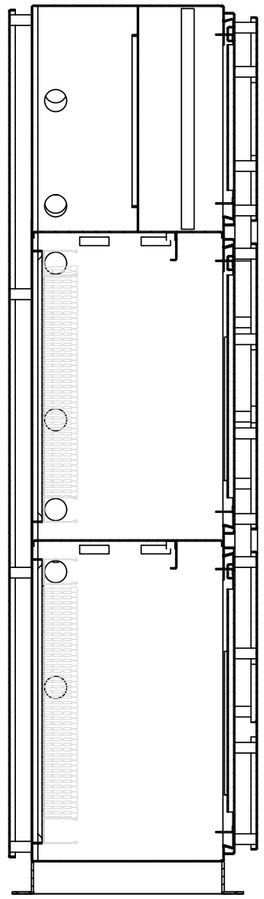

SECTION A-A

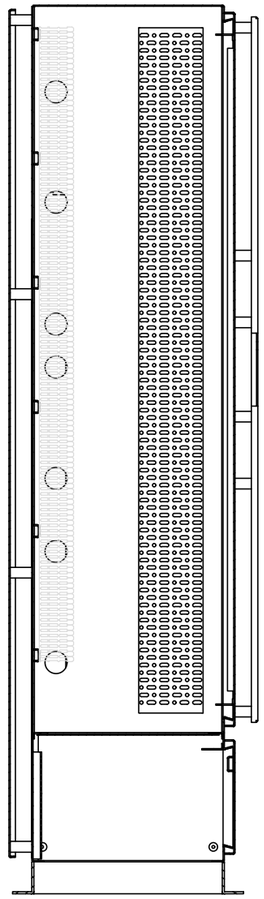

SECTION B-B

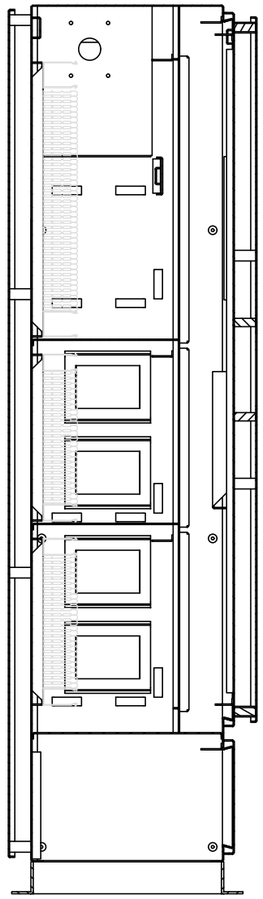

SECTION C-C

A3

INDEX	DATE	REVISIONS	DRAWN	CHECKED	PASSED
0	01.02.22	RENAMED FROM UWSTD-E-SPS-6kW-DOL-033	YV	TGS	TGS

DRAWN	A.K	18.02.21
CHECKED	LG	18.02.21
PASSED	JD	18.02.21
	INITIALS	DATE

Unitywater

Unitywater

IFxxxxxx

SEWAGE PUMPING STATION - 0-6kW DOL

STANDARD DRAWINGS

ELECTRICAL SWITCHBOARD - GENERAL ARRANGEMENT Sht 4 of 5

SHEET OF SHEETS | SCALE N/A

REVISION DATE 01.02.22 | REVISION 0

DISCIPLINE CODE E

DRAWING NO.

UWDSTD-E-DR-8002-33

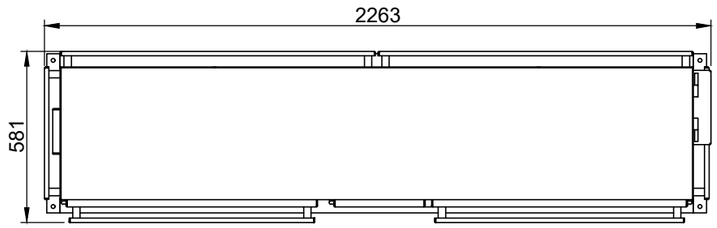

TOP VIEW

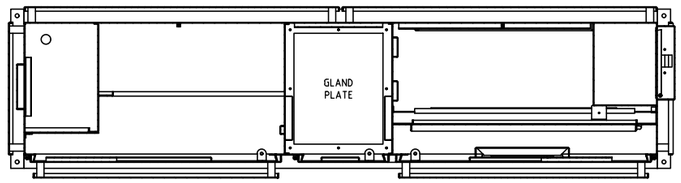

SECTION D-D

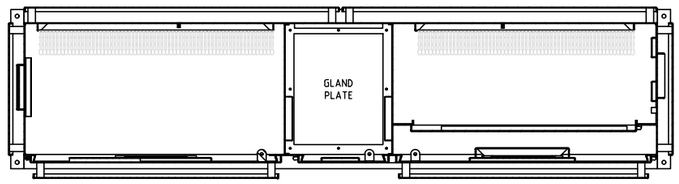

SECTION E-E

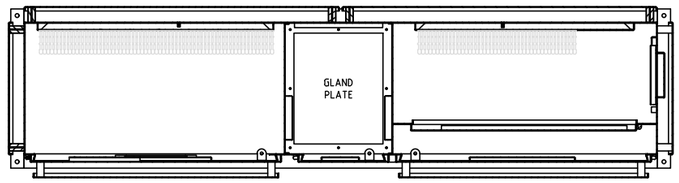

SECTION F-F

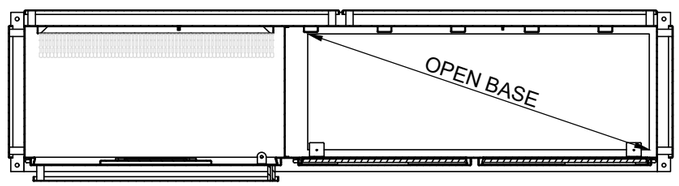

SECTION G-G

GENERAL NOTES:

1. SWITCHBOARD TO BE MANUFACTURED OF 3.0mm MARINE GRADE ALUMINIUM, FULLY WELDED AT JOINTS. STIFFEN WHERE NECESSARY TO FORM A RIGID WEATHER AND VERMIN PROOF ENCLOSURE, REFER UNITYWATER STANDARD SPECIFICATION.
2. ANY REQUIRED PROTRUSIONS THROUGH EQUIPMENT PANELS TO BE SUITABLY LOCATED & COVERED BY CABLE DUCT, AND BUSHED FOR PROTECTION.
3. EARTHING LUGS TO BE POSITIONED CLOSE TO DOORS BUT LOCATED SUITABLY TO ALLOW TOOL ACCESS.
4. FIX CABLE LOOMS SECURELY TO DOOR WHERE SUITABLE.

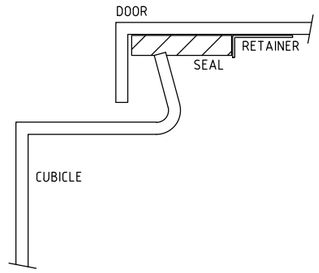

WEATHERPROOF

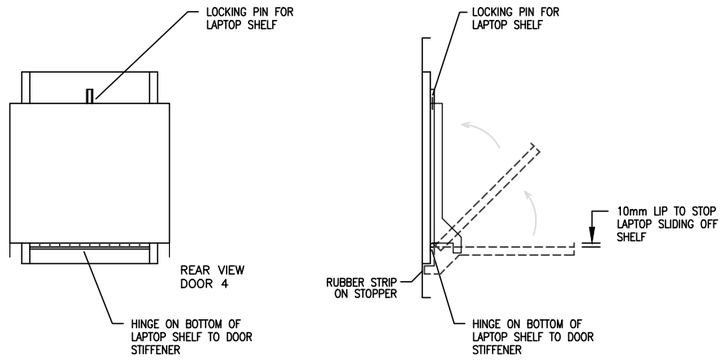

LAPTOP SHELF DETAIL

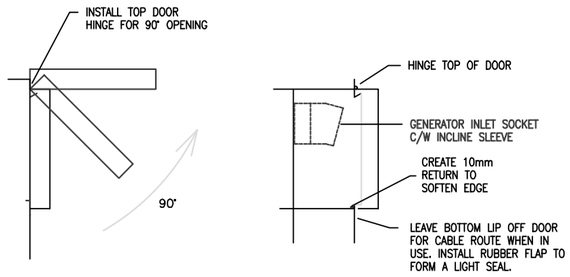

GENERATOR PLUG ACCESS DOOR
SECTION EE

INDEX	DATE	REVISIONS	DRAWN	CHECKED	PASSED
0	01.02.22	RENAMED FROM UWSTD-E-SPS-6kW-DOL-034	YV	TGS	TGS

	INITIALS	DATE
DRAWN	A.K	18.02.21
CHECKED	LG	18.02.21
PASSED	JD	18.02.21

A3

Unitywater

IFxxxxxx
SEWAGE PUMPING STATION - 0-6kW DOL
STANDARD DRAWINGS
ELECTRICAL SWITCHBOARD - GENERAL ARRANGEMENT Sht 5 of 5

SHEET OF SHEETS | SCALE N/A
REVISION DATE 01.02.22 | REVISION 0
DISCIPLINE CODE E
DRAWING NO. UWDSTD-E-DR-8002-34

SITE PLAN

NOTES:

1. LOCATE ALL EXISTING SERVICES IN THE AREA PRIOR TO COMMENCEMENT OF WORKS, INCLUDING EXECUTING A DIAL BEFORE YOU DIG.
2. ALL WORKS TO COMPLY TO UNITYWATER SPECIFICATION, AS/NZS3000 (ELEC WIRING RULES) AND OTHER RELEVANT CODES & SPECIFICATIONS.
3. DISUSED SITE ASSETS ARE TO BE REMOVED AND THE SITE MADE GOOD AT THE END OF CONSTRUCTION.
4. WHERE A CHANGE OF DIRECTION IS REQUIRED FOR ELECTRICAL CONDUITS, LARGE SWEEP BENDS ARE TO BE USED.
5. RECONNECT ALL EXISTING CIRCUITS AND INSTRUMENTS

www.dialbeforeyoudig.com.au
DIAL1100 BEFORE YOU DIG

CAUTION

THE LOCATION OF SERVICES ON THIS DWG HAVE NOT BEEN PROVEN AND ARE INDICATIVE ONLY. TAKE MEASURES TO LOCATE SERVICES PRIOR TO COMMENCEMENT OF WORKS.

A3

INDEX	DATE	REVISIONS	DRAWN	CHECKED	PASSED
0	01.02.22	RENAMED FROM UWSTD-E-SPS-6kW-DOL-050	YV	TGS	TGS

	INITIALS	DATE
DRAWN	A.K	18.02.21
CHECKED	LG	18.02.21
PASSED	JD	18.02.21

Unitywater

Unitywater
IFxxxxxx
SEWAGE PUMPING STATION - 0-6kW DOL
STANDARD DRAWINGS
SITE PLAN

SHEET OF SHEETS | SCALE N/A
REVISION DATE 01.02.22 | REVISION 0
DISCIPLINE CODE E
DRAWING NO.
UWDSTD-E-DR-8002-50