SEWAGE PUMPING STATION
STANDARD DRAWINGS
FOR 25 - 60.0kW VFD STATION
SCADA ID:

DRAWING LIST

DRAWING NUMBER	DRAWING TITLE	REVISION
UWDSTD-E-DR-8023-01	TITLE AND INDEX SHEET	0
UWDSTD-E-DR-8023-02	INCOMING POWER SCHEMATIC DIAGRAM	0
UWDSTD-E-DR-8023-03	240VAC POWER SUPPLIES & DISTRIBUTION SCHEMATIC DIAGRAM	0
UWDSTD-E-DR-8023-04	24VDC POWER SUPPLIES SCHEMATIC DIAGRAM	0
UWDSTD-E-DR-8023-05	EMERGENCY PUMP STARTER & OVERFLOW CIRCUIT SCHEMATIC DIAGRAM	0
UWDSTD-E-DR-8023-06	COMMON CONTROL CIRCUIT SCHEMATIC DIAGRAM	0
UWDSTD-E-DR-8023-07	PUMP 1 POWER AND CONTROL SCHEMATIC DIAGRAM	0
UWDSTD-E-DR-8023-08	PUMP 2 POWER AND CONTROL SCHEMATIC DIAGRAM	0
UWDSTD-E-DR-8023-09	SCADAPACK DIGITAL INPUT SCHEMATIC DIAGRAM	0
UWDSTD-E-DR-8023-10	SCADAPACK DIGITAL I/O SCHEMATIC DIAGRAM	0
UWDSTD-E-DR-8023-11	SCADAPACK ANALOGUE INPUT (LOWER BOARD) SCHEMATIC DIAGRAM	0
UWDSTD-E-DR-8023-12	SCADAPACK ANALOGUE INPUT (UPPER BOARD) SCHEMATIC DIAGRAM	0
UWDSTD-E-DR-8023-13	SCADAPACK COMMUNICATIONS SCHEMATIC DIAGRAM	0
UWDSTD-E-DR-8023-14	PUMP STATION INSTRUMENTATION SCHEMATIC DIAGRAM	0
UWDSTD-E-DR-8023-15	EQUIPMENT SCHEDULE	0
UWDSTD-E-DR-8023-16	CABLE SCHEDULE	0
UWDSTD-E-DR-8023-17	TERMINAL LAYOUT	0
UWDSTD-E-DR-8023-18	PUMP 1 VARIABLE FREQUENCY DRIVE SETTINGS	0
UWDSTD-E-DR-8023-19	PUMP 2 VARIABLE FREQUENCY DRIVE SETTINGS	0
UWDSTD-E-DR-8023-20	ATS & GENERATOR CONTROLLER SCHEMATIC DIAGRAM	0
UWDSTD-E-DR-8023-25	ALTERNATE EQUIPMENT	0
UWDSTD-E-DR-8023-30	CONCEPT ELECTRICAL SWITCHBOARD GENERAL ARRANGEMENT	0
UWDSTD-E-DR-8023-31	RESERVED FOR ELECTRICAL SWITCHBOARD GENERAL ARRANGEMENT AS REQUIRED	
UWDSTD-E-DR-8023-32	RESERVED FOR ELECTRICAL SWITCHBOARD GENERAL ARRANGEMENT AS REQUIRED	
UWDSTD-E-DR-8023-33	RESERVED FOR ELECTRICAL SWITCHBOARD GENERAL ARRANGEMENT AS REQUIRED	
UWDSTD-E-DR-8023-34	RESERVED FOR ELECTRICAL SWITCHBOARD GENERAL ARRANGEMENT AS REQUIRED	
UWDSTD-E-DR-8023-50	SITE PLAN	0

A3

INDEX	DATE	REVISIONS	DRAWN	CHECKED	PASSED
0	01.02.22	RENAMED FROM UWSTD-E-SPS-60kW-VFD-001	YV	TGS	TGS

	INITIALS	DATE
DRAWN	AK	19.02.21
CHECKED	LG	19.02.21
PASSED	JD	19.02.21

Unitywater

Unitywater
IFxxxxxx
SEWAGE PUMPING STATION - 25-60kW VFD
STANDARD DRAWINGS
TITLE & INDEX SHEET

SHEET OF SHEETS | SCALE N/A
REVISION DATE 01.02.22 | REVISION 0
DISCIPLINE CODE E
DRAWING NO. UWDSTD-E-DR-8023-01

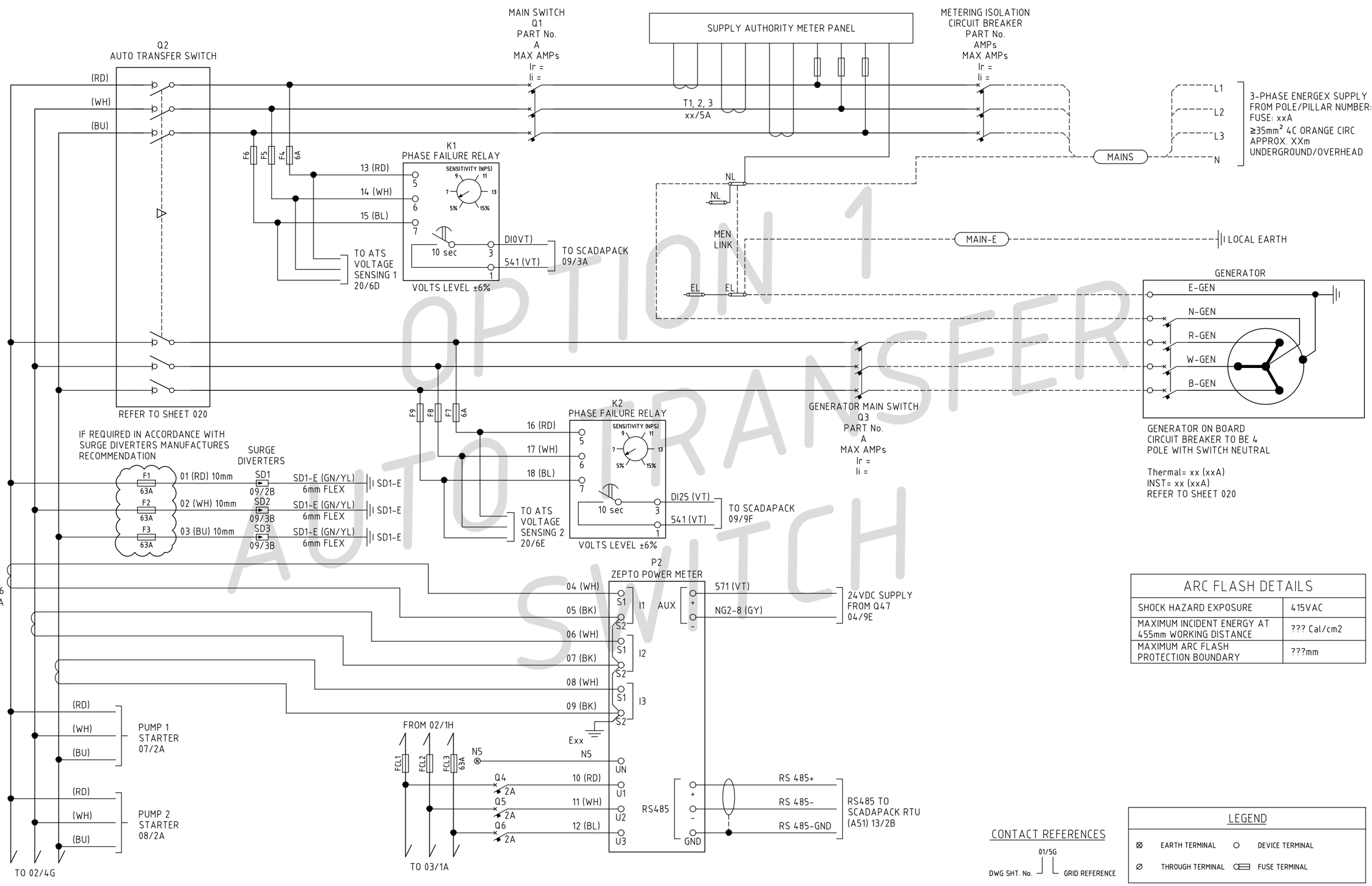

ARC FLASH DETAILS	
SHOCK HAZARD EXPOSURE	415VAC
MAXIMUM INCIDENT ENERGY AT 455mm WORKING DISTANCE	??? Cal/cm2
MAXIMUM ARC FLASH PROTECTION BOUNDARY	???mm

A3

INDEX	DATE	REVISIONS	DRAWN	CHECKED	PASSED
0	01.02.22	RENAMED FROM UWSTD-E-SPS-60kW-VFD-002a	YV	TGS	TGS

	INITIALS	DATE
DRAWN	AK	19.02.21
CHECKED	LG	19.02.21
PASSED	JD	19.02.21

Unitywater

IFxxxxxx
SEWAGE PUMPING STATION - 25-60kW VFD
STANDARD DRAWINGS
INCOMING POWER SCHEMATIC DIAGRAM

SHEET OF SHEETS | SCALE N/A
REVISION DATE 01.02.22 | REVISION 0
DISCIPLINE CODE E
DRAWING NO.
UWDSTD-E-DR-8023-02a

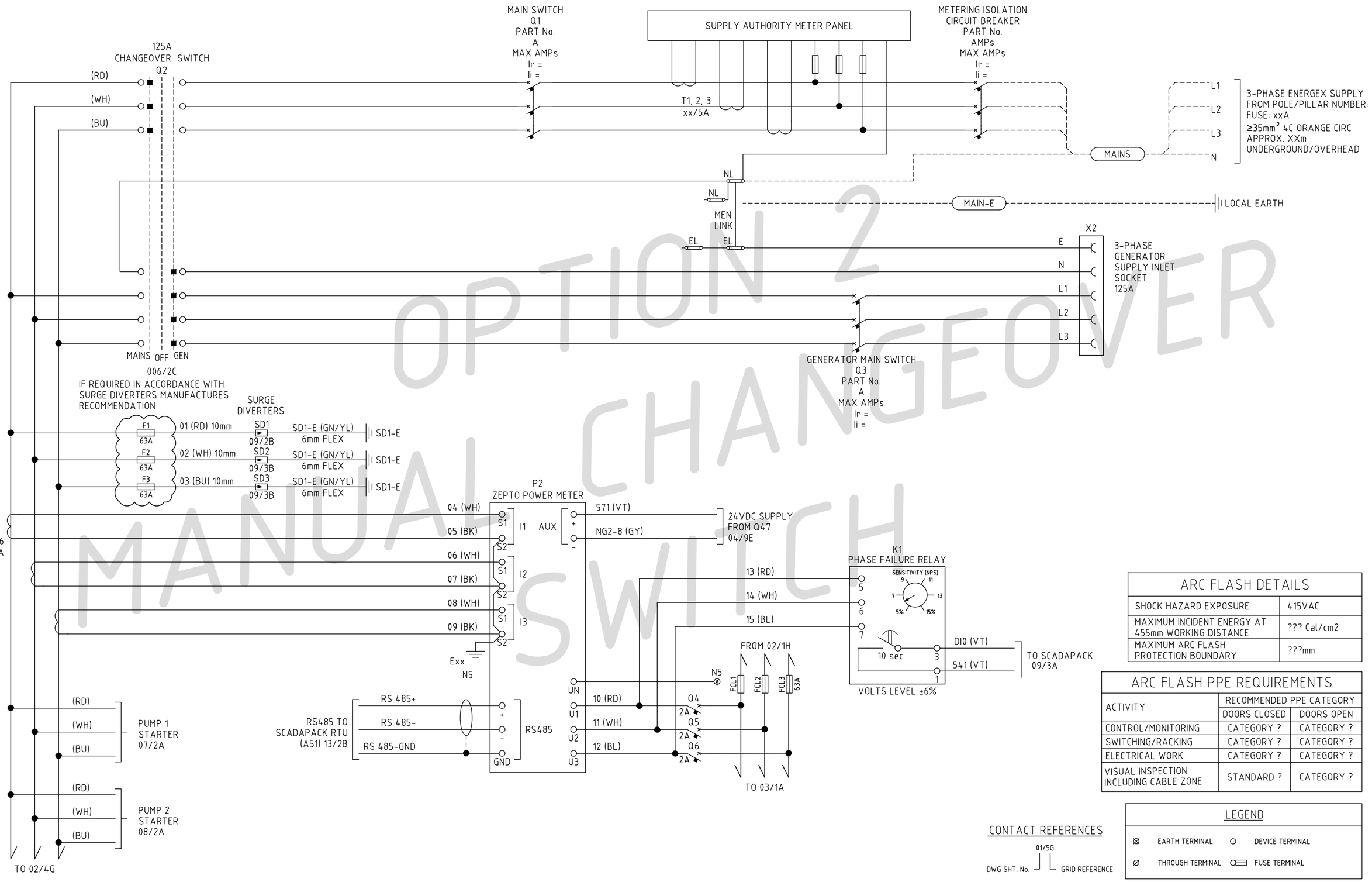

OPTION 2
MANUAL CHANGEOVER
SWITCH

ARC FLASH DETAILS

SHOCK HAZARD EXPOSURE	415VAC
MAXIMUM INCIDENT ENERGY AT 455mm WORKING DISTANCE	??? Cal/cm2
MAXIMUM ARC FLASH PROTECTION BOUNDARY	???mm

ARC FLASH PPE REQUIREMENTS

ACTIVITY	RECOMMENDED PPE CATEGORY	
	DOORS CLOSED	DOORS OPEN
CONTROL/MONITORING	CATEGORY ?	CATEGORY ?
SWITCHING/RACKING	CATEGORY ?	CATEGORY ?
ELECTRICAL WORK	CATEGORY ?	CATEGORY ?
VISUAL INSPECTION INCLUDING CABLE ZONE	STANDARD ?	CATEGORY ?

CONTACT REFERENCES

01/5G

DWG SHT. No. — GRID REFERENCE

LEGEND

⊠	EARTH TERMINAL	○	DEVICE TERMINAL
⊘	THROUGH TERMINAL	⊂⊃	FUSE TERMINAL

A3

INDEX	DATE	REVISIONS	DRAWN	CHECKED	PASSED
0	01.02.22	RENAMED FROM UWSTD-E-SPS-60kW-VFD-002b	YV	TGS	TGS

	INITIALS	DATE
DRAWN	AK	19.02.21
CHECKED	LG	19.02.21
PASSED	JD	19.02.21

Unitywater

IFxxxxxx
SEWAGE PUMPING STATION - 25-60kW VFD
STANDARD DRAWINGS
INCOMING POWER SCHEMATIC DIAGRAM

SHEET OF SHEETS | SCALE N/A
REVISION DATE 01.02.22 | REVISION 0
DISCIPLINE CODE E
DRAWING NO.
UWDSTD-E-DR-8023-02b

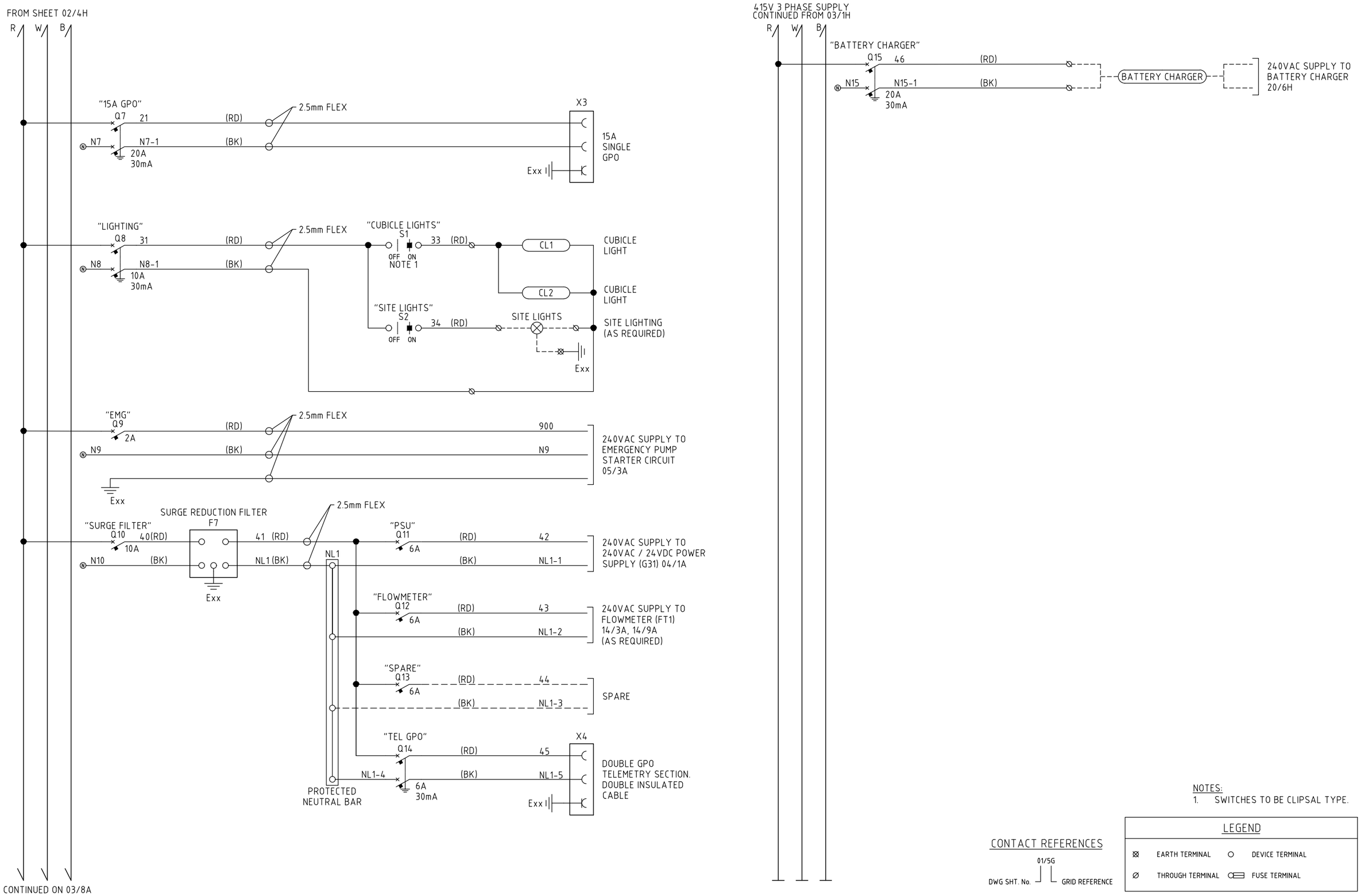

INDEX	DATE	REVISIONS	DRAWN	CHECKED	PASSED
0	01.02.22	RENAMED FROM UWSTD-E-SPS-60kW-VFD-003	YV	TGS	TGS

	INITIALS	DATE
DRAWN	AK	19.02.21
CHECKED	LG	19.02.21
PASSED	JD	19.02.21

A3

Unitywater

IFxxxxxx

SEWAGE PUMPING STATION - 25-60kW VFD

STANDARD DRAWINGS

240VAC POWER SUPPLIES & DISTRIBUTION SCHEMATIC DIAGRAM

SHEET OF SHEETS | SCALE N/A

REVISION DATE 01.02.22 | REVISION 0

DISCIPLINE CODE E

DRAWING NO. UWDSTD-E-DR-8023-03

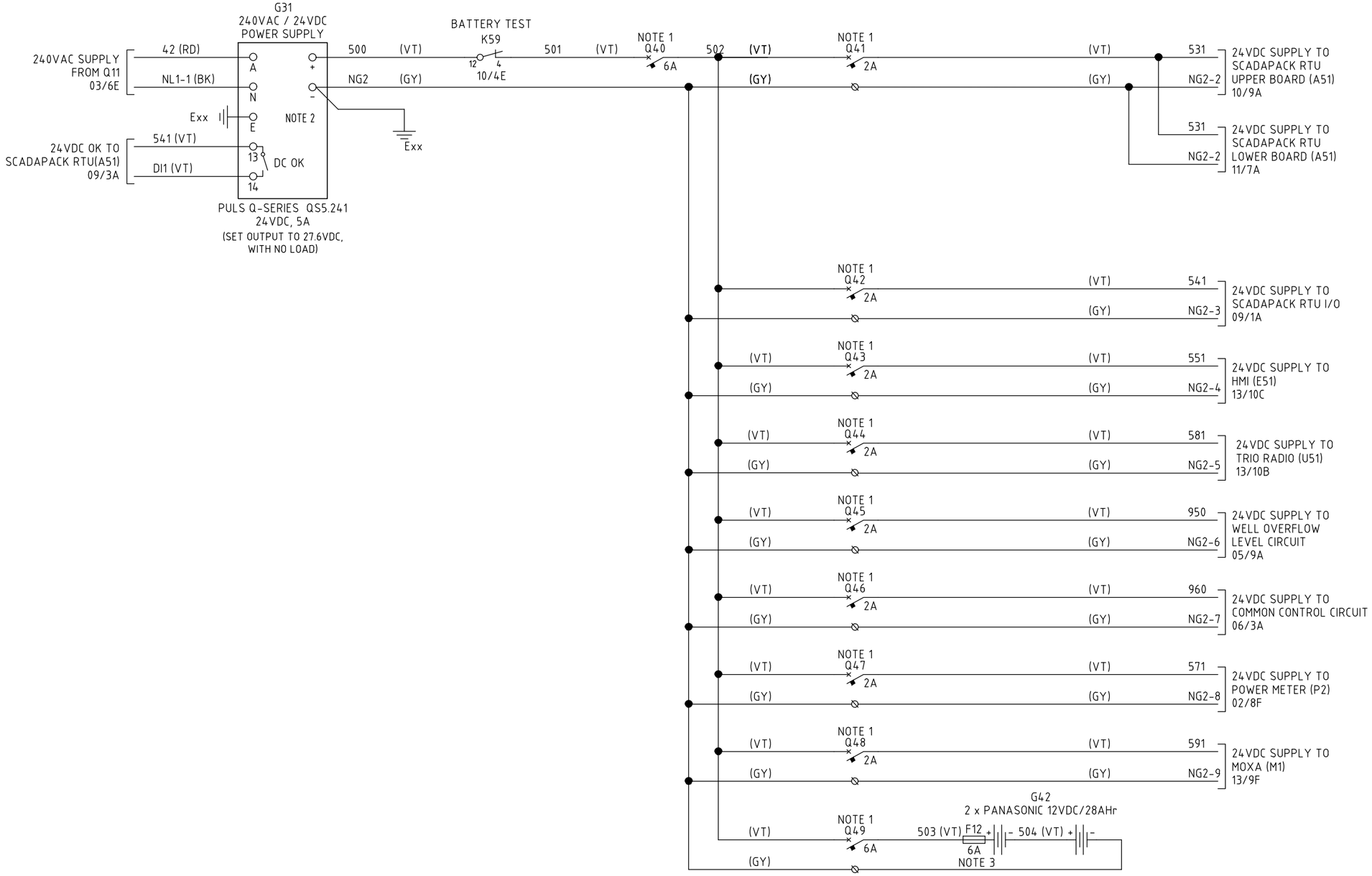

NOTES:

1. DC RATED CIRCUIT BREAKER.
2. POWER SUPPLIES TO BE GROUNDED.
3. INLINE FUSE ON CABLE INSTALLED CLOSE TO BATTERY.
4. 24VDC TO 12VDC CONVERTER (MEANWELL SD-25B-12) IS REQUIRED IF E-SERIES RADIO IS TO BE INSTALLED.

CONTACT REFERENCES

01/5G

DWG SHT. No. — GRID REFERENCE

LEGEND

⊠	EARTH TERMINAL	○	DEVICE TERMINAL
∅	THROUGH TERMINAL	⊂⊃	FUSE TERMINAL

A3

INDEX	DATE	REVISIONS	DRAWN	CHECKED	PASSED
0	01.02.22	RENAMED FROM UWSTD-E-SPS-60kW-VFD-004	YV	TGS	TGS

	INITIALS	DATE
DRAWN	AK	19.02.21
CHECKED	LG	19.02.21
PASSED	JD	19.02.21

Unitywater

IFxxxxxx

SEWAGE PUMPING STATION - 25-60kW VFD

STANDARD DRAWINGS

24VDC POWER SUPPLIES SCHEMATIC DIAGRAM

SHEET OF SHEETS | SCALE N/A

REVISION DATE 01.02.22 | REVISION 0

DISCIPLINE CODE E

DRAWING NO. UWDSTD-E-DR-8023-04

EMERGENCY PUMP STARTER CIRCUIT

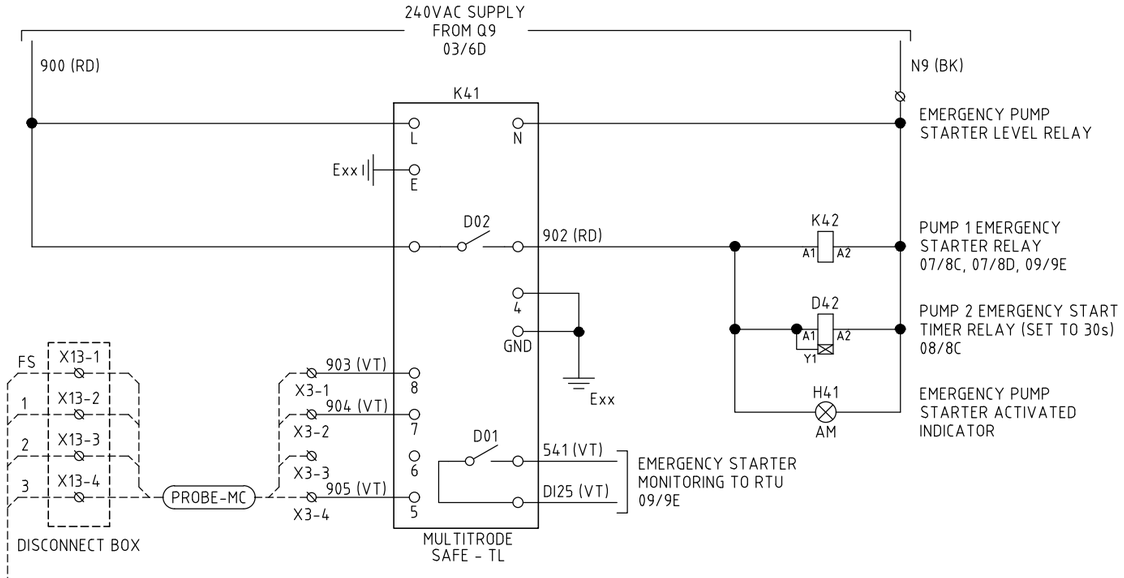

WELL OVERFLOW LEVEL CIRCUIT

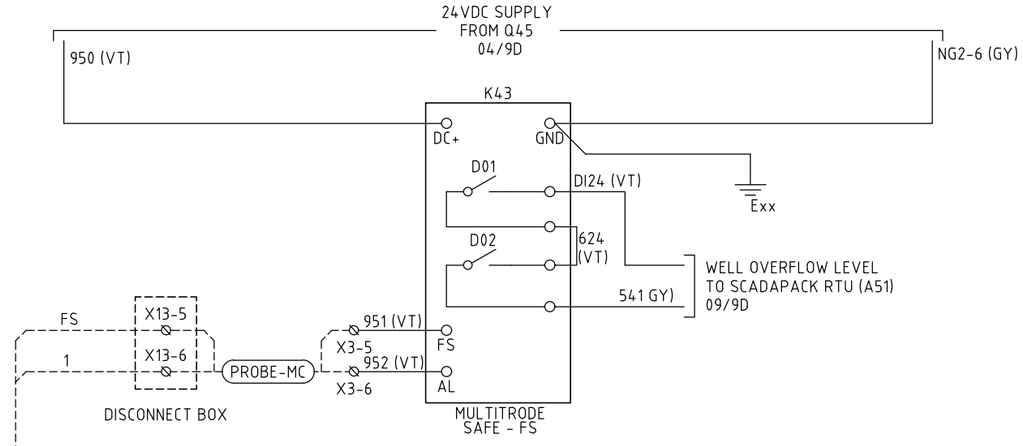

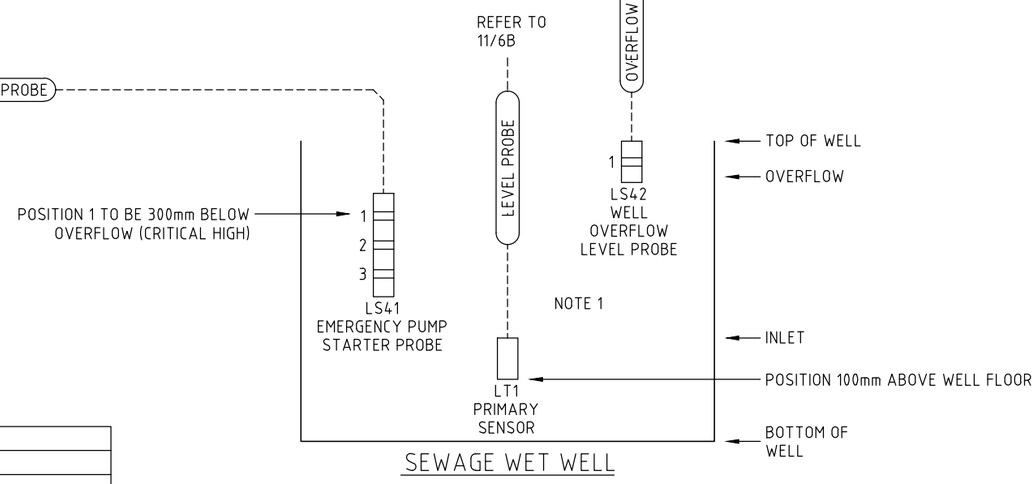

SEWAGE WET WELL

REFER TO SCADA PAGE FOR WELL LEVELS

D42
MULTIFUNCTION TIMER

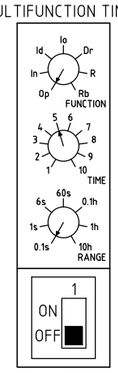

CARLO GAVAZZI
DMB01

SAFE-TL

ON OFF

DIP SWITCH	SETTING	MODE FUNCTION
1	OFF	EMPTY (DISCHARGE) MODE
2	OFF	HIGH LEVEL ALARM
3	ON	10 SECOND PUMP & ALARM ACTIVATION DELAY
4	ON	SEAL FAULT LED ONLY
5	OFF	THERMAL
6	ON	AUTO THERMAL RESET
7	OFF	PROBE SENSITIVITY - 20k OHM
8	ON	

SAFE-FS

ON OFF

DIP SWITCH	SETTING	MODE FUNCTION
1	OFF	HIGH LEVEL ALARM
2	ON	10 SECOND LEVEL ALARM ACTIVATION DELAY
3	ON	10 SECOND LEVEL ALARM DEACTIVATION DELAY
4	OFF	N/C LEVEL ALARM
5	OFF	N/C FAILSAFE PROBE ALARM
6	N/A	NOT USED
7	OFF	PROBE SENSITIVITY - 20k OHM
8	ON	

NOTES
1. PROBE WITHIN WELL TO BE LABELED WITH NYLON LABELS ONLY.

CONTACT REFERENCES

01/5G
DWG SHT. No. — GRID REFERENCE

LEGEND

⊠	EARTH TERMINAL	○	DEVICE TERMINAL
⌀	THROUGH TERMINAL		FUSE TERMINAL

A3

INDEX	DATE	REVISIONS	DRAWN	CHECKED	PASSED
0	01.02.22	RENAMED FROM UWSTD-E-SPS-60kW-VFD-005	YV	TGS	TGS

	INITIALS	DATE
DRAWN	AK	19.02.21
CHECKED	LG	19.02.21
PASSED	JD	19.02.21

Unitywater

Unitywater
IFxxxxxx
SEWAGE PUMPING STATION - 25-60kW VFD
STANDARD DRAWINGS
EMERGENCY PUMP STARTER & OVERFLOW CIRCUIT SCHEMATIC DIAGRAM

SHEET OF SHEETS | SCALE N/A
REVISION DATE 01.02.22 | REVISION 0
DISCIPLINE CODE E
DRAWING NO.
UWDSTD-E-DR-8023-05

COMMON CONTROL CIRCUITS

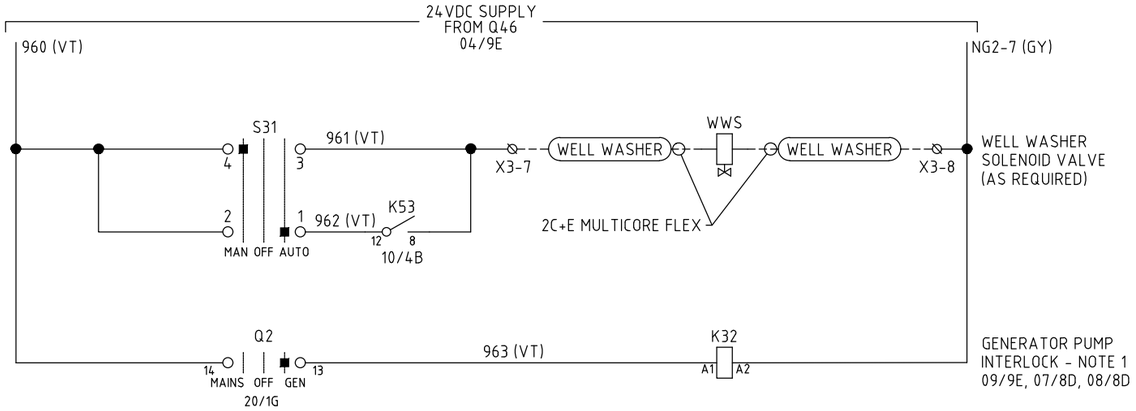

NOTES:

1. ENERGISED WHEN MAIN SWITCH IS SWITCHED TO GENERATOR POSITION

CONTACT REFERENCES

01/5G

DWG SHT. No. — GRID REFERENCE

LEGEND

⊠	EARTH TERMINAL	○	DEVICE TERMINAL
⊘	THROUGH TERMINAL		FUSE TERMINAL

A3

INDEX	DATE	REVISIONS	DRAWN	CHECKED	PASSED
0	01.02.22	RENAMED FROM UWSTD-E-SPS-60kW-VFD-006	YV	TGS	TGS

	INITIALS	DATE
DRAWN	AK	19.02.21
CHECKED	LG	19.02.21
PASSED	JD	19.02.21

Unitywater

IFxxxxxx

SEWAGE PUMPING STATION - 25-60kW VFD

STANDARD DRAWINGS

COMMON CONTROL CIRCUIT SCHEMATIC DIAGRAM

SHEET OF SHEETS | SCALE N/A

REVISION DATE 01.02.22 | REVISION 0

DISCIPLINE CODE E

DRAWING NO. UWDSTD-E-DR-8023-06

PUMP 1 CONTROL CIRCUIT

EXAMPLE OF DANFOSS VFD WITH NO DISCONNECT BOX

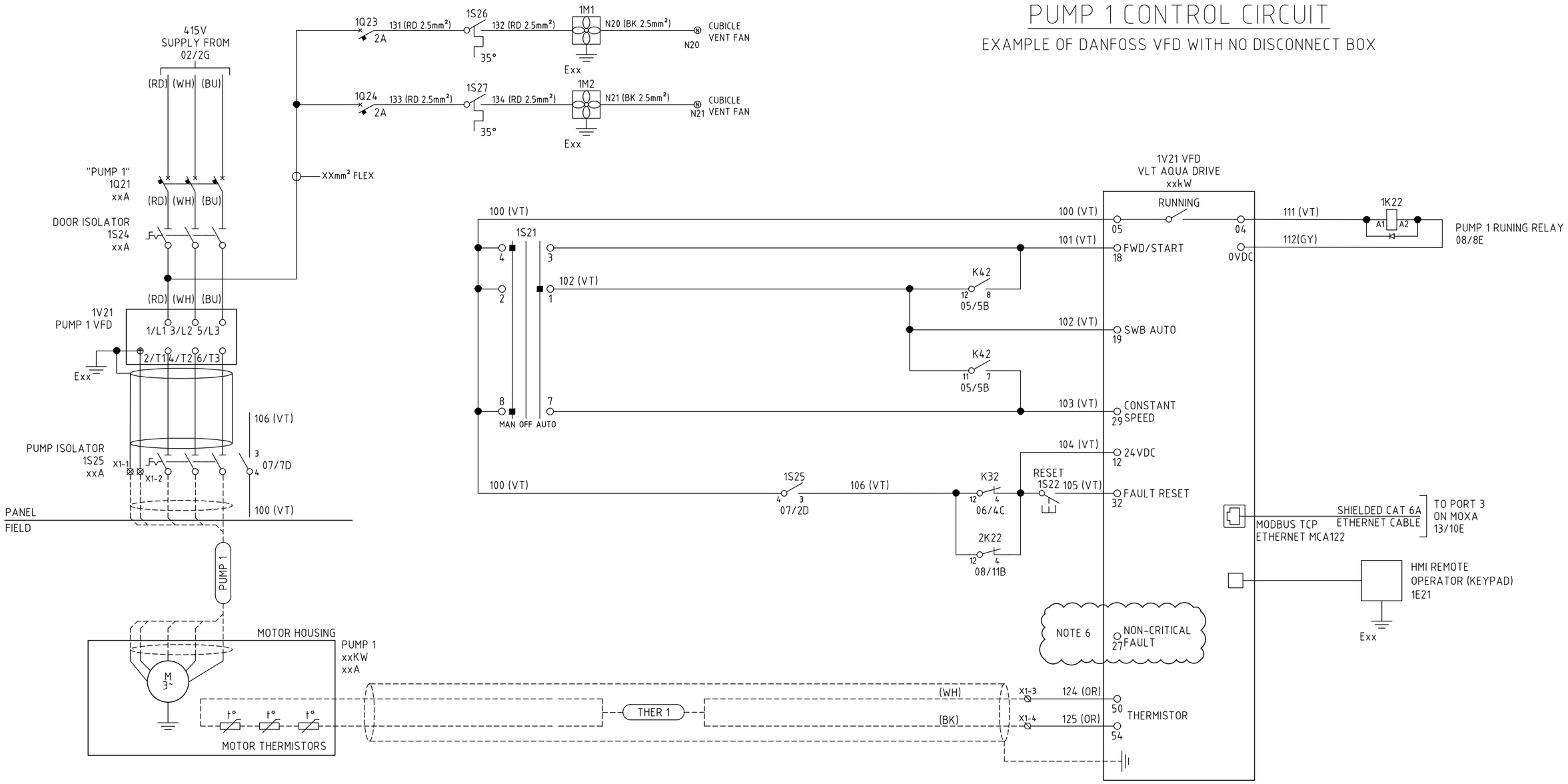

NOTES:

1. TERMINAL NUMBERS SHALL REFLECT DRIVE USED.
2. EXAMPLE OF SCHNEIDER AND DANFOSS VFD HAS BEEN PROVIDED - ALL SWITCHBOARDS ARE TO HAVE THE SAME BRAND OF VFD THROUGHOUT THE SWITCHBOARD.
3. OUTPUT CHOKES/FILTERS MAY BE REQUIRED FOR LONG CABLE APPLICATIONS.
4. MOTOR PROTECTION TO BE INSTALLED ACCORDING TO MANUFACTURE REQUIREMENTS. W10, PT100, PTC TO BE WIRED ACCORDINGLY.
5. DC CHOKES ARE REQUIRED FOR ALL INSTALLATIONS WHERE AC CHOKES HAVE NOT BEEN SUPPLIED.
6. OPTIONAL FAULT RELAY FROM PUMP (SHOWN AS NON-CRITICAL FAULT IN SCADA) VARIES WITH PUMP BRAND.
7. PUMP CABLE SCREENED TO BE EARTHED AS REQUIRED

CONTACT REFERENCES

01/5G
DWG SHT. No. — GRID REFERENCE

LEGEND

⊠	EARTH TERMINAL	○	DEVICE TERMINAL
⊘	THROUGH TERMINAL		FUSE TERMINAL

A3

INDEX	DATE	REVISIONS	DRAWN	CHECKED	PASSED
0	01.02.22	RENAMED FROM UWSTD-E-SPS-60kW-VFD-007	YV	TGS	TGS

	INITIALS	DATE
DRAWN	AK	19.02.21
CHECKED	LG	19.02.21
PASSED	JD	19.02.21

Unitywater

IFxxxxxx
SEWAGE PUMPING STATION - 25-60kW VFD
STANDARD DRAWINGS
PUMP 1 POWER AND CONTROL SCHEMATIC DIAGRAM

SHEET OF SHEETS | SCALE N/A
REVISION DATE 01.02.22 | REVISION 0
DISCIPLINE CODE E
DRAWING NO. UWDSTD-E-DR-8023-07

PUMP 2 CONTROL CIRCUIT

EXAMPLE OF SCHNEIDER VFD

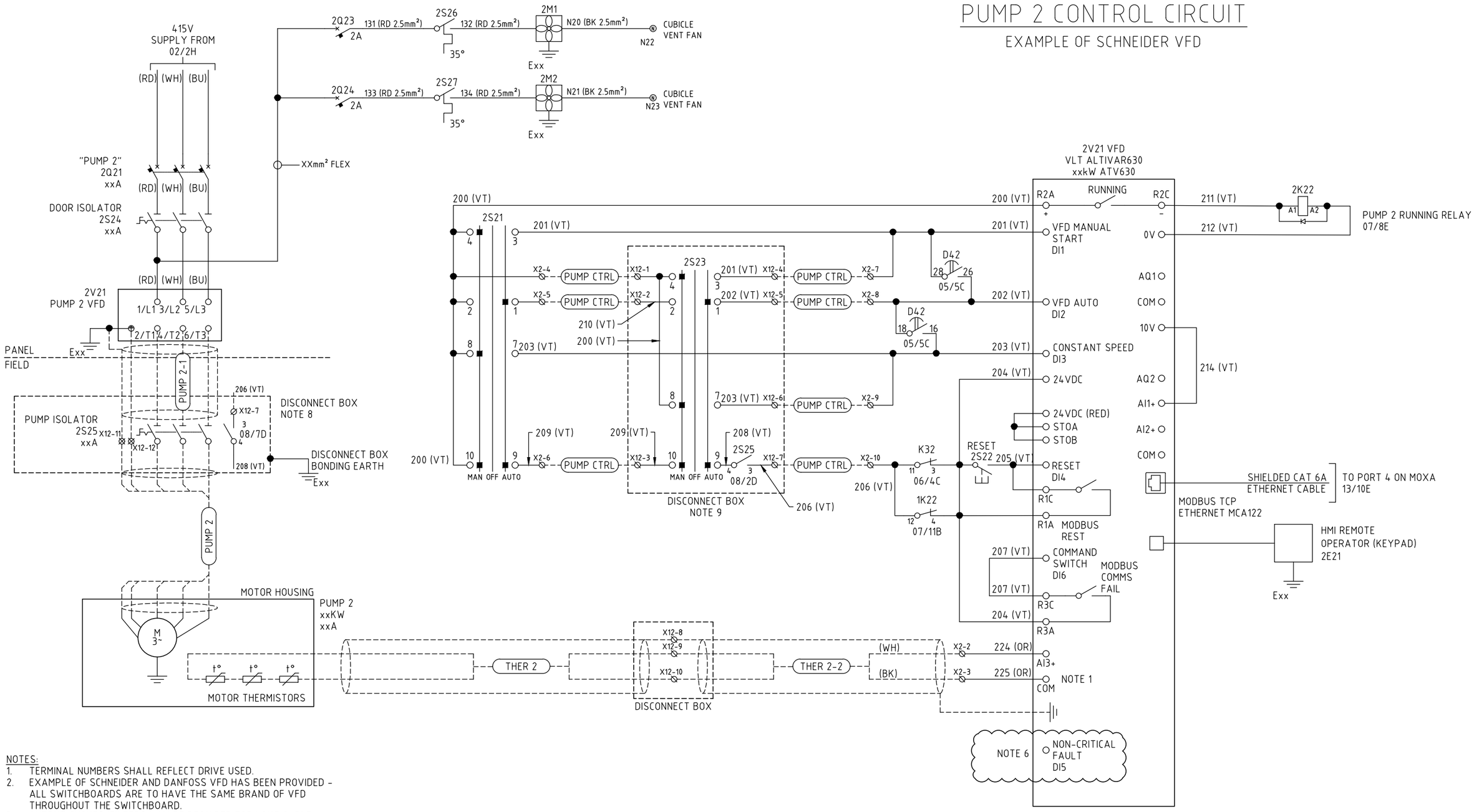

NOTES:

1. TERMINAL NUMBERS SHALL REFLECT DRIVE USED.
2. EXAMPLE OF SCHNEIDER AND DANFOSS VFD HAS BEEN PROVIDED - ALL SWITCHBOARDS ARE TO HAVE THE SAME BRAND OF VFD THROUGHOUT THE SWITCHBOARD.
3. OUTPUT CHOKES/FILTERS MAY BE REQUIRED FOR LONG CABLE APPLICATIONS.
4. MOTOR PROTECTION TO BE INSTALLED ACCORDING TO MANUFACTURE REQUIREMENTS. W10, PT100, PTC TO BE WIRED ACCORDINGLY.
5. DC CHOKES ARE REQUIRED FOR ALL INSTALLATIONS WHERE AC CHOKES HAVE NOT BEEN SUPPLIED.
6. OPTIONAL FAULT RELAY FROM PUMP (SHOWN AS NON-CRITICAL FAULT IN SCADA) VARIES WITH PUMP BRAND.
7. PUMP CABLE SCREENED TO BE EARTHED AS REQUIRED
8. IF DISCONNECT BOX IS NOT REQUIRED PUMP ISOLATOR SHALL BE INSTALLED IN SWITCHBOARD'S PUMP CONTROL CUBICLE.
9. BRIDGE OUT TERMINALS (X2-2 & X2-5) AND (X2-3 & X2-7) IF DISCONNECT BOX IS NOT REQUIRED.

CONTACT REFERENCES

01/5G
DWG SHT. No. — GRID REFERENCE

LEGEND

⊠	EARTH TERMINAL	○	DEVICE TERMINAL
⊘	THROUGH TERMINAL	○⊟	FUSE TERMINAL

A3

INDEX	DATE	REVISIONS	DRAWN	CHECKED	PASSED
0	01.02.22	RENAMED FROM UWSTD-E-SPS-60kW-VFD-008	YV	TGS	TGS

	INITIALS	DATE
DRAWN	AK	19.02.21
CHECKED	LG	19.02.21
PASSED	JD	19.02.21

Unitywater

Unitywater
IFxxxxxx
SEWAGE PUMPING STATION - 25-60kW VFD
STANDARD DRAWINGS
PUMP 2 POWER AND CONTROL SCHEMATIC DIAGRAM

SHEET OF SHEETS | SCALE N/A
REVISION DATE 01.02.22 | REVISION 0
DISCIPLINE CODE E
DRAWING NO. UWDSTD-E-DR-8023-08

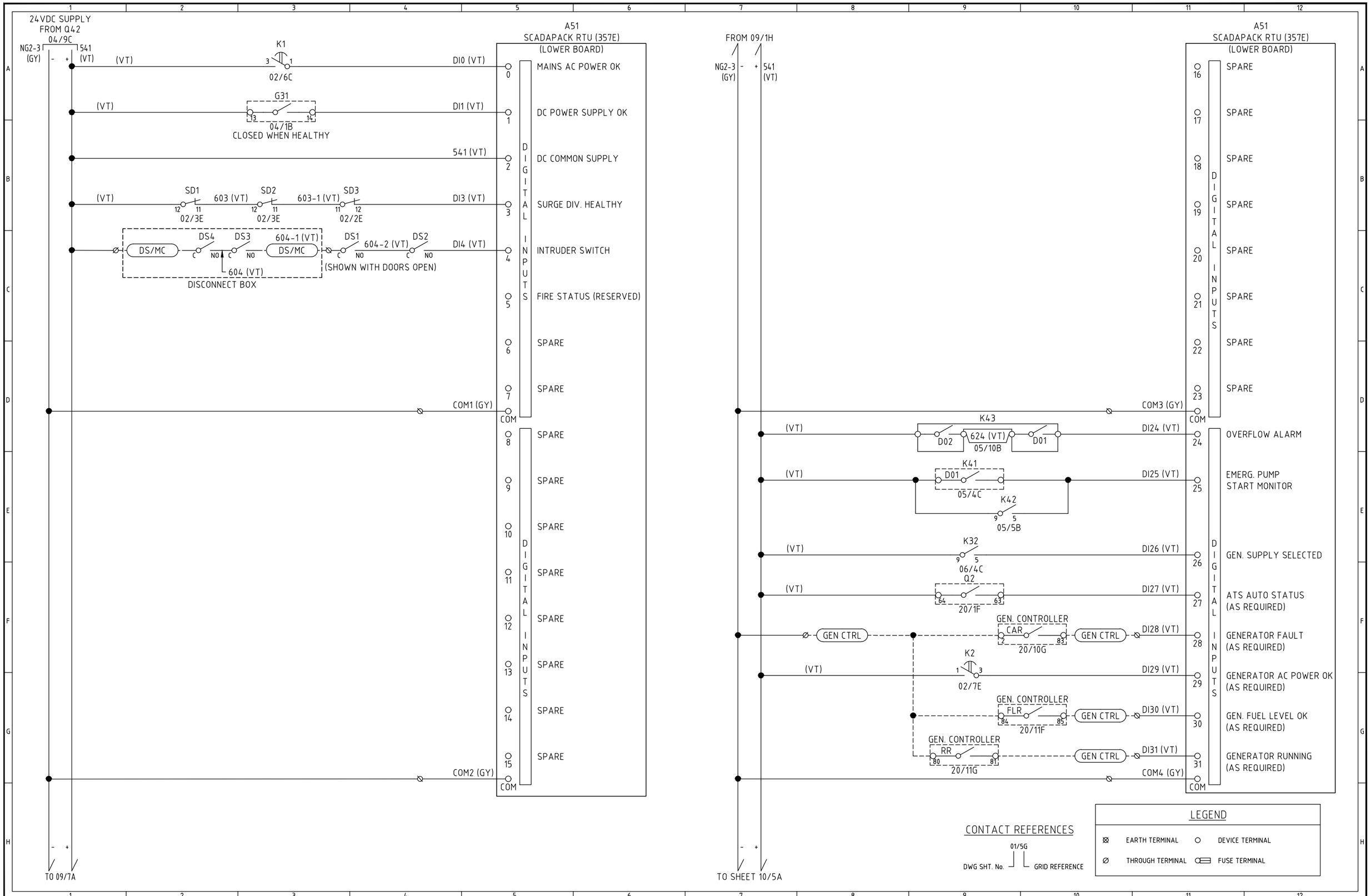

INDEX	DATE	REVISIONS	DRAWN	CHECKED	PASSED
0	01.02.22	RENAMED FROM UWSTD-E-SPS-60kW-VFD-009	YV	TGS	TGS

	INITIALS	DATE
DRAWN	AK	19.02.21
CHECKED	LG	19.02.21
PASSED	JD	19.02.21

A3

Unitywater

IFxxxxxx
SEWAGE PUMPING STATION - 25-60kW VFD
STANDARD DRAWINGS
SCADAPACK DIGITAL INPUT SCHEMATIC DIAGRAM

SHEET OF SHEETS | SCALE N/A
REVISION DATE 01.02.22 | REVISION 0
DISCIPLINE CODE E
DRAWING NO. UWDSTD-E-DR-8023-09

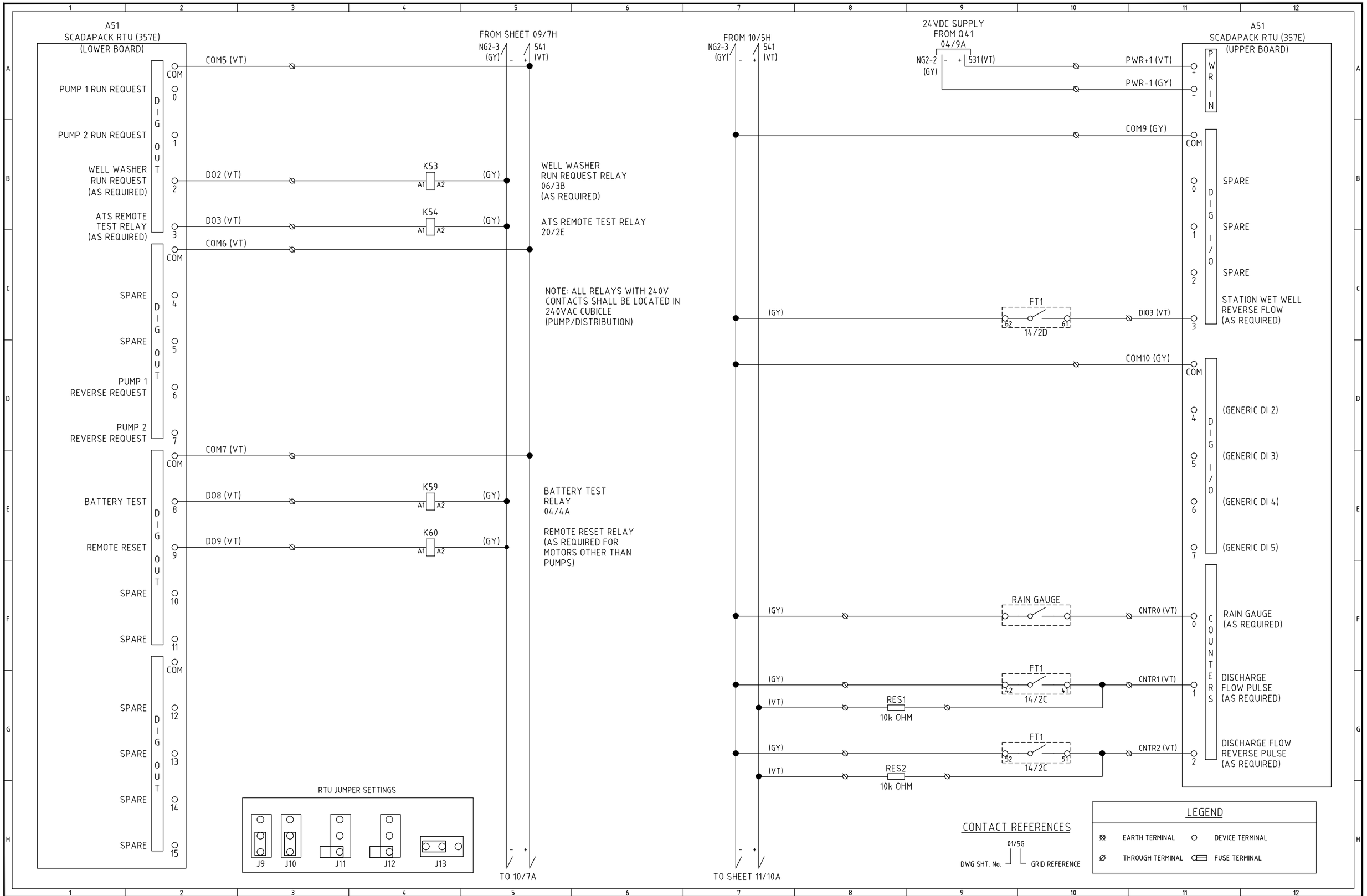

A3

INDEX	DATE	REVISIONS	DRAWN	CHECKED	PASSED
0	01.02.22	RENAMED FROM UWSTD-E-SPS-60kW-VFD-010	YV	TGS	TGS

	INITIALS	DATE
DRAWN	AK	19.02.21
CHECKED	LG	19.02.21
PASSED	JD	19.02.21

Unitywater

IFxxxxxx
SEWAGE PUMPING STATION - 25-60kW VFD
STANDARD DRAWINGS
SCADAPACK DIGITAL I/O SCHEMATIC DIAGRAM

SHEET OF SHEETS | SCALE N/A
REVISION DATE 01.02.22 | REVISION 0
DISCIPLINE CODE E
DRAWING NO. UWDSTD-E-DR-8023-10

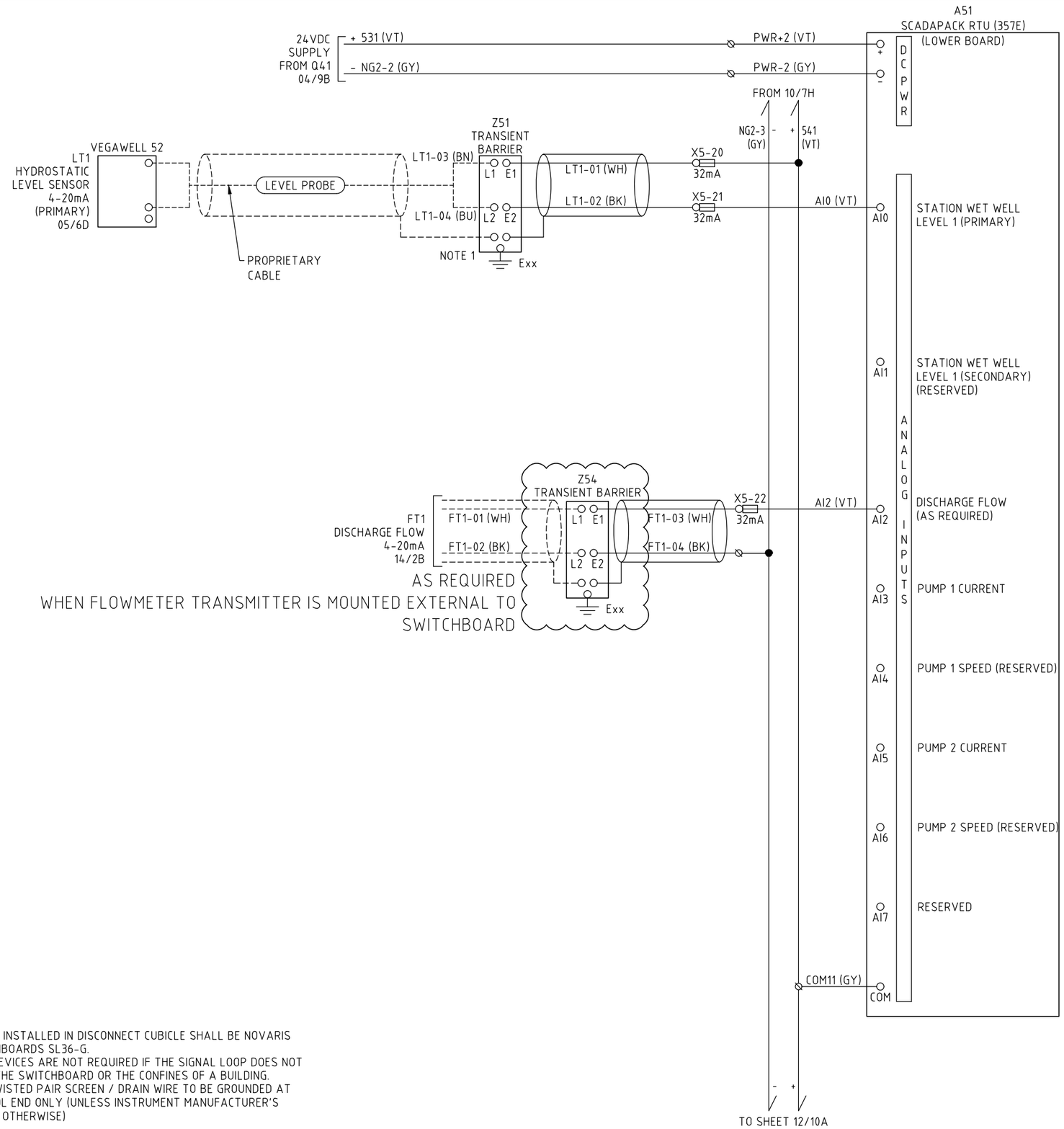

CONTACT REFERENCES

01/5G
DWG SHT. No. — GRID REFERENCE

LEGEND			
⊠	EARTH TERMINAL	○	DEVICE TERMINAL
∅	THROUGH TERMINAL	⊂⊃	FUSE TERMINAL

NOTES
1. TRANSIENT BARRIERS INSTALLED IN DISCONNECT CUBICLE SHALL BE NOVARIS SL36-EC90, IN SWITCHBOARDS SL36-G.
2. SURGE PROTECTION DEVICES ARE NOT REQUIRED IF THE SIGNAL LOOP DOES NOT EXTEND OUTSIDE OF THE SWITCHBOARD OR THE CONFINES OF A BUILDING.
3. INSTRUMENTATION TWISTED PAIR SCREEN / DRAIN WIRE TO BE GROUNDED AT TELEMETRY / CONTROL END ONLY (UNLESS INSTRUMENT MANUFACTURER'S INSTRUCTIONS STATE OTHERWISE)

A3

INDEX	DATE	REVISIONS	DRAWN	CHECKED	PASSED
0	01.02.22	RENAMED FROM UWSTD-E-SPS-60kW-VFD-011	YV	TGS	TGS

	INITIALS	DATE
DRAWN	AK	19.02.21
CHECKED	LG	19.02.21
PASSED	JD	19.02.21

Unitywater

Unitywater
IFxxxxxx
SEWAGE PUMPING STATION - 25-60kW VFD
STANDARD DRAWINGS
SCADAPACK ANALOGUE INPUT SCHEMATIC DIAGRAM

SHEET OF SHEETS | SCALE N/A
REVISION DATE 01.02.22 | REVISION 0
DISCIPLINE CODE E
DRAWING NO. UWDSTD-E-DR-8023-11

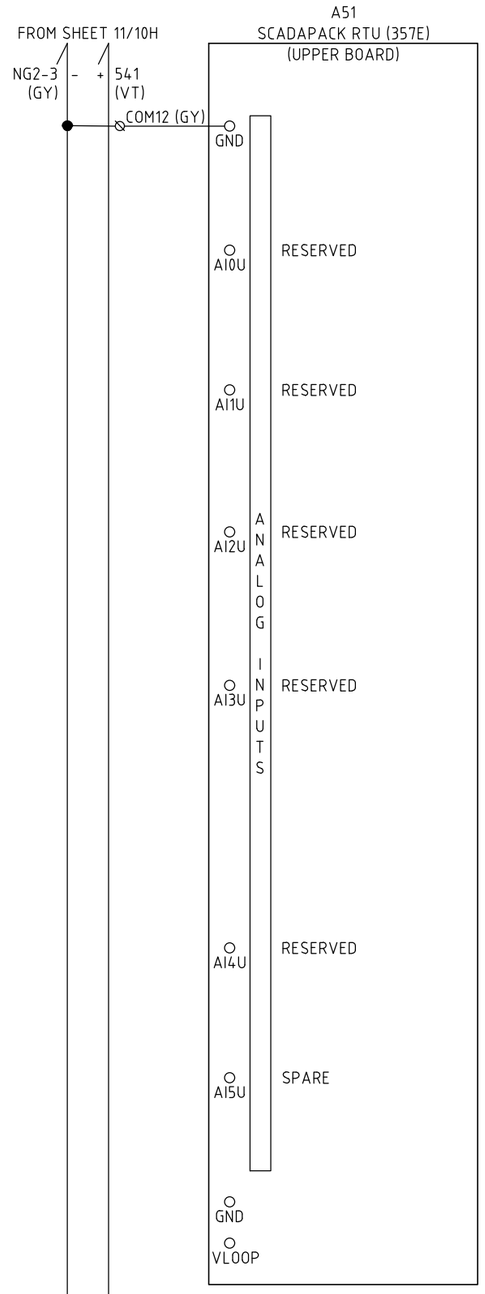

CONTACT REFERENCES

01/5G

DWG SHT. No. — GRID REFERENCE

LEGEND

⊠	EARTH TERMINAL	○	DEVICE TERMINAL
∅	THROUGH TERMINAL		FUSE TERMINAL

A3

INDEX	DATE	REVISIONS	DRAWN	CHECKED	PASSED
0	01.02.22	RENAMED FROM UWSTD-E-SPS-60kW-VFD-012	YV	TGS	TGS

	INITIALS	DATE
DRAWN	AK	19.02.21
CHECKED	LG	19.02.21
PASSED	JD	19.02.21

Unitywater

IFxxxxxx

SEWAGE PUMPING STATION - 25-60kW VFD

STANDARD DRAWINGS

SCADAPACK ANALOGUE INPUT (UPPER BOARD) SCHEMATIC DIAGRAM

SHEET OF SHEETS | SCALE N/A

REVISION DATE 01.02.22 | REVISION 0

DISCIPLINE CODE E

DRAWING NO. UWDSTD-E-DR-8023-12

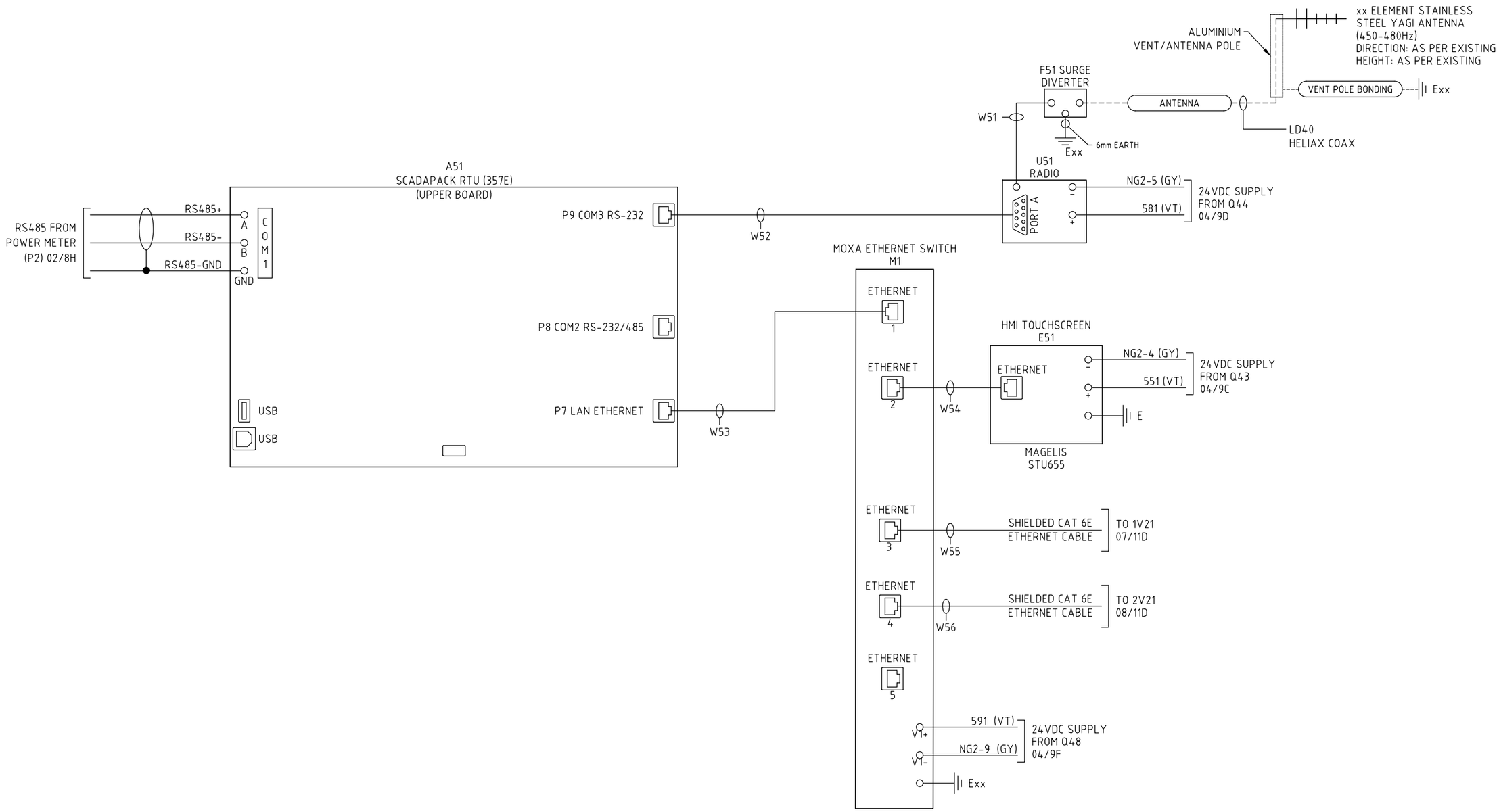

CONTACT REFERENCES

01/5G

DWG SHT. No. — GRID REFERENCE

LEGEND

⊠	EARTH TERMINAL	○	DEVICE TERMINAL
⊘	THROUGH TERMINAL		FUSE TERMINAL

A3

INDEX	DATE	REVISIONS	DRAWN	CHECKED	PASSED
0	01.02.22	RENAMED FROM UWSTD-E-SPS-60kW-VFD-013	YV	TGS	TGS

	INITIALS	DATE
DRAWN	AK	19.02.21
CHECKED	LG	19.02.21
PASSED	JD	19.02.21

Unitywater

IFxxxxxx
SEWAGE PUMPING STATION - 25-60kW VFD
STANDARD DRAWINGS
SCADAPACK COMMUNICATIONS SCHEMATIC DIAGRAM

SHEET OF SHEETS | SCALE N/A
REVISION DATE 01.02.22 | REVISION 0
DISCIPLINE CODE E
DRAWING NO. UWDSTD-E-DR-8023-13

FLOWMETER CONTROL CIRCUIT

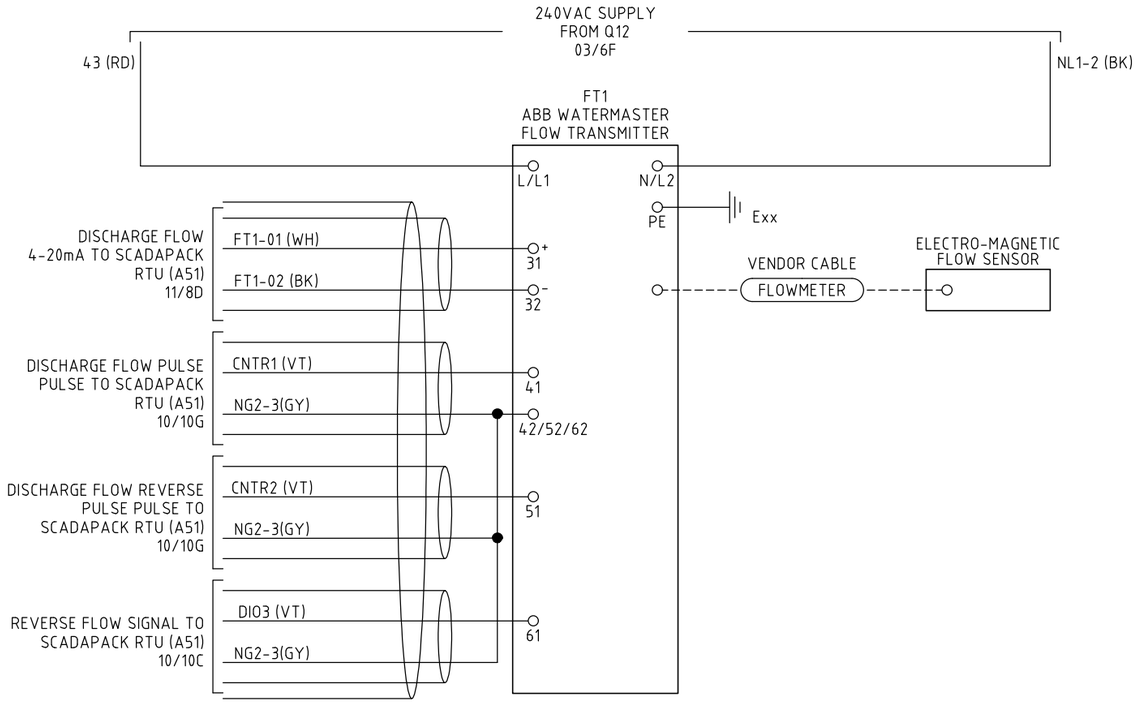

FLOWMETER CONTROL CIRCUIT

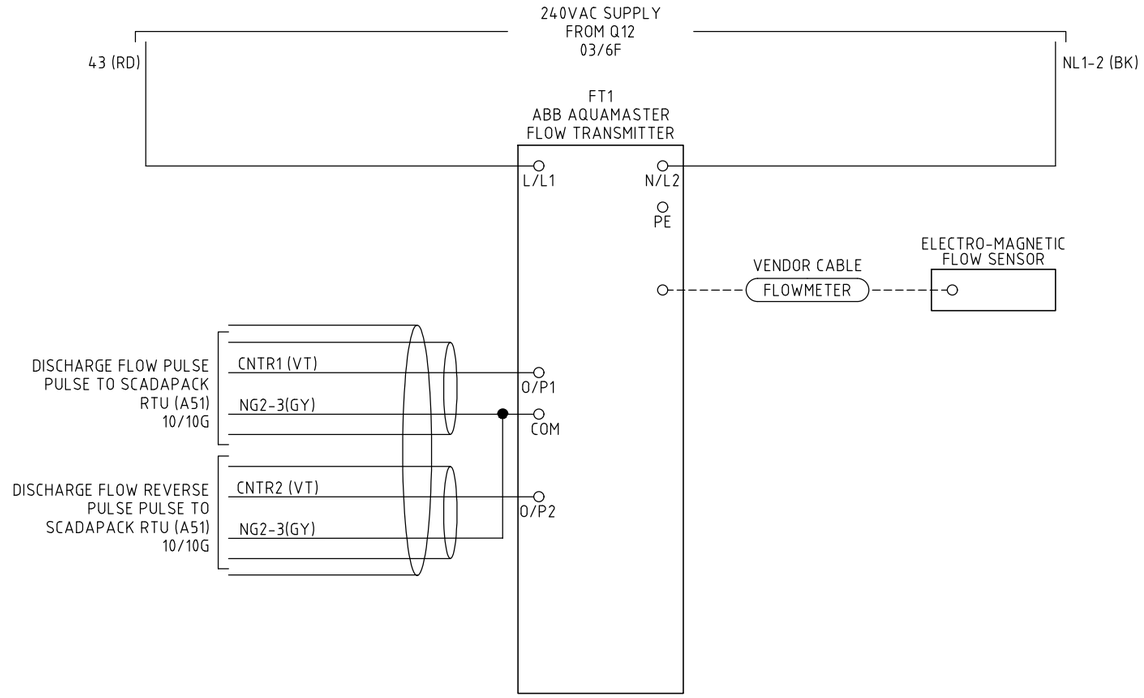

CONTACT REFERENCES

01/5G

DWG SHT. No. — GRID REFERENCE

LEGEND

⊠	EARTH TERMINAL	○	DEVICE TERMINAL
⌀	THROUGH TERMINAL	○▭	FUSE TERMINAL

A3

INDEX	DATE	REVISIONS	DRAWN	CHECKED	PASSED
0	01.02.22	RENAMED FROM UWSTD-E-SPS-60kW-VFD-014	YV	TGS	TGS

	INITIALS	DATE
DRAWN	AK	19.02.21
CHECKED	LG	19.02.21
PASSED	JD	19.02.21

Unitywater

IFxxxxxx

SEWAGE PUMPING STATION - 25-60kW VFD

STANDARD DRAWINGS

PUMP STATION INSTRUMENTATION SCHEMATIC DIAGRAM

SHEET OF SHEETS | SCALE N/A

REVISION DATE 01.02.22 | REVISION 0

DISCIPLINE CODE E

DRAWING NO. UWDSTD-E-DR-8023-14

EQUIPMENT SCHEDULE

CONTACT REFERENCES

01/5G

DWG SHT. No. — GRID REFERENCE

LEGEND			
⊠	EARTH TERMINAL	○	DEVICE TERMINAL
∅	THROUGH TERMINAL	○▭	FUSE TERMINAL

A3

INDEX	DATE	REVISIONS	DRAWN	CHECKED	PASSED
0	01.02.22	RENAMED FROM UWSTD-E-SPS-60kW-VFD-015	YV	TGS	TGS

	INITIALS	DATE
DRAWN	AK	19.02.21
CHECKED	LG	19.02.21
PASSED	JD	19.02.21

Unitywater

IFxxxxxx

SEWAGE PUMPING STATION - 25-60kW VFD

STANDARD DRAWINGS

EQUIPMENT SCHEDULE

SHEET OF SHEETS | SCALE N/A

REVISION DATE 01.02.22 | REVISION 0

DISCIPLINE CODE E

DRAWING NO. UWDSTD-E-DR-8023-15

CABLE SCHEDULE

STATUS	FROM	FROM EQUIPMENT TAG	TO	TO EQUIPMENT TAG	CABLE SIZE	SHEATH/INSULATION/ COLOUR/SHAPE	CORES	TYPE	VOLTAGE	Designation	Label	Distance (Approx)	Supplied By:	Installed By:	Notes
	Pole/Pillar		MSB	X1	≥35mm	Orange circ	4c	Power	415VAC	Mains	Mains				
	Earth Pit		MSB	Main Earth Bar	≥10mm	Earth	1c	Earth		Mains - Earth	Mains - E				
	Disconnect box	LS41	Wet Well	K41				Instrumentation		Emergency Pump Starter Probe	Emergency Probe				This is the probe cable
	Disconnect box	LT1	Wet Well	Z51				Instrumentation		Primary Level Sensor	Level Probe				This is the sensor cable
	Disconnect box	LS42	Wet Well	K43				Instrumentation		Overflow Probe	Overflow Probe				This is the probe cable
	MSB		Disconnect box		1.5mm	Instrolex	4pair	Instrumentation		Probes	Probe DK				As required
	MSB	1S25	Wet Well	Pump 1				Power	415VAC	Pump 1 Motor Cable	Pump 1				
	MSB	1V21	Wet Well	Pump 1	1.5mm	Instrolex	1pair	Instrumentation		Pump 1 Thermistor Cable	Ther 1				
	Disconnect Box	S2S25	Wet Well	Pump 2				Power	415VAC	Pump 2 Motor Cable	Pump 2				
	MSB	2V21	Disconnect box	2S25		EMC	3c+3e	Power	415VAC	Pump 2 Motor Cable	Pump 2-1				As required
	MSB	2V21	Disconnect box			Instrolex	1pair	Instrumentation		Pump 2 Thermistor Cable	Ther 2-1				As required
	Disconnect Box		Wet Well	Pump 2		Instrolex	1pair	Instrumentation		Pump 2 Thermistor Cable	Ther 2				As required
	MSB		Disconnect box	2S23	1.5mm	Orange circ	7c+e	Instrumentation		Pump 2 Mode Cable	Pump CTRL				As required
	MSB	F51	Antenna			CNT400		Antenna Coax		Antenna Coax	Antenna				
	MSB	Earth bar	Vent Pole		6mm	Earth	1c	Earth		Vent Pole Bonding	Vent Pole Bonding				
	MSB		Well Washer	WWS	1.5mm	Orange circ	2c+e	24vdc Power		Well Washer	Well Washer				As required
	MSB	S1	Site Lights		2.5mm	Orange circ	2c+e	Power	240VAC	Site Lights	Site Lights				As required
	MSB		Disconnect box		6mm	Earth	1c	Earth		Disconnect Box bonding Earth	Disco Box Bond				As required

NOTES
1. 24VDC INSTRUMENTATION CABLES THAT RUN TO THE DISCONNECTION BOX FROM THE MSB MAY BE ONE INDIVIDUAL AND OVERALL SCREENED INSTROLEX/DEKRON AT ELECTRICAL CONTRACTOR DISCRETION.

CONTACT REFERENCES

01/5G
DWG SHT. No. — GRID REFERENCE

LEGEND

⊠	EARTH TERMINAL	○	DEVICE TERMINAL
∅	THROUGH TERMINAL		FUSE TERMINAL

A3

INDEX	DATE	REVISIONS	DRAWN	CHECKED	PASSED
0	01.02.22	RENAMED FROM UWSTD-E-SPS-60kW-VFD-016	YV	TGS	TGS

	INITIALS	DATE
DRAWN	AK	19.02.21
CHECKED	LG	19.02.21
PASSED	JD	19.02.21

Unitywater

Unitywater
IFxxxxxx
SEWAGE PUMPING STATION - 25-60kW VFD
STANDARD DRAWINGS
CABLE SCHEDULE

SHEET OF SHEETS | SCALE N/A
REVISION DATE 01.02.22 | REVISION 0
DISCIPLINE CODE E
DRAWING NO. UWDSTD-E-DR-8023-16

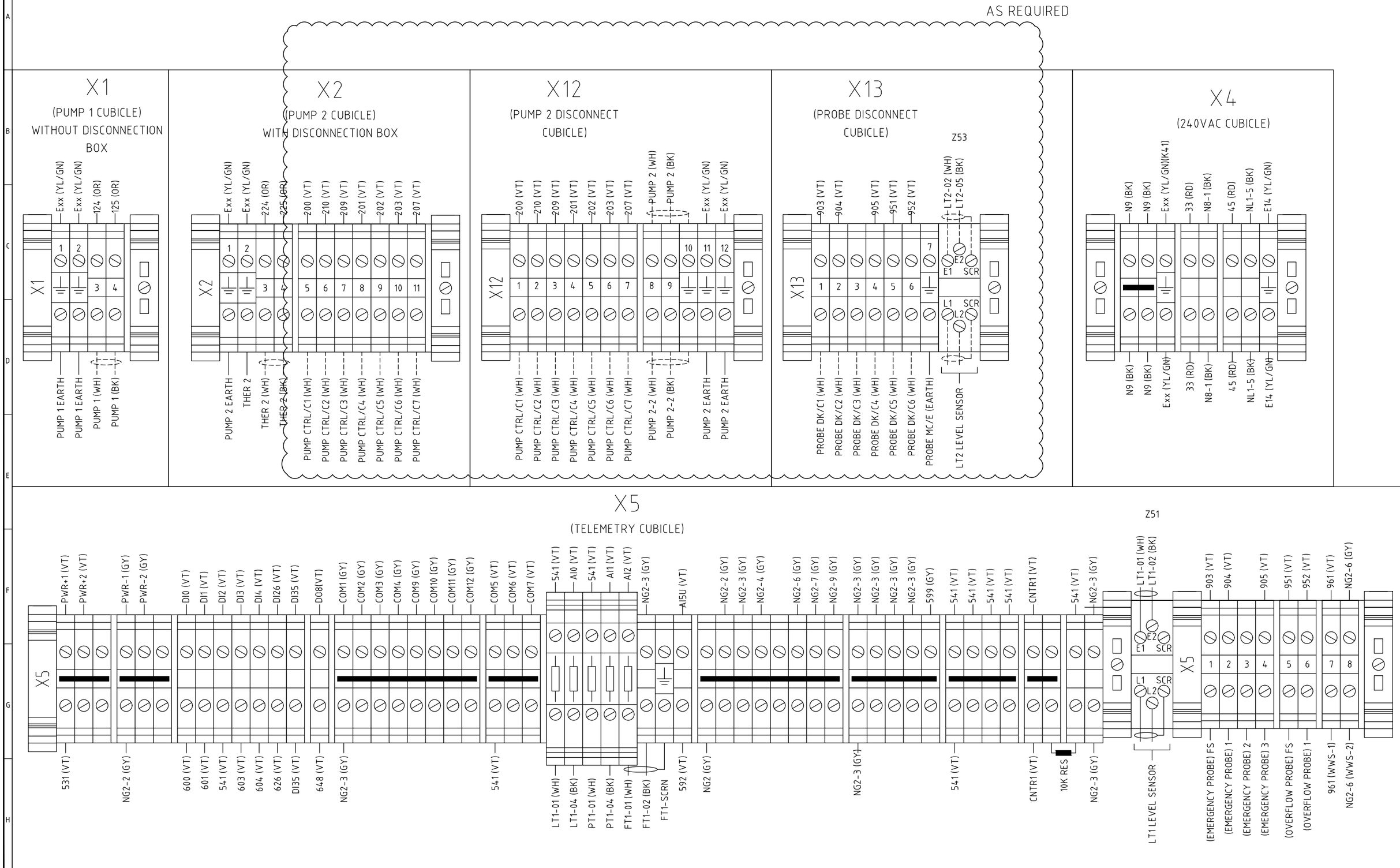

A3

INDEX	DATE	REVISIONS	DRAWN	CHECKED	PASSED
0	01.02.22	RENAMED FROM UWSTD-E-SPS-60kW-VFD-017	YV	TGS	TGS

	INITIALS	DATE
DRAWN	AK	19.02.21
CHECKED	LG	19.02.21
PASSED	JD	19.02.21

Unitywater

Unitywater
IFxxxxxx
SEWAGE PUMPING STATION - 25-60kW VFD
STANDARD DRAWINGS
TERMINAL LAYOUT

SHEET OF SHEETS | SCALE N/A
REVISION DATE 01.02.22 | REVISION 0
DISCIPLINE CODE E
DRAWING NO.
UWDSTD-E-DR-8023-17

A3

INDEX	DATE	REVISIONS	DRAWN	CHECKED	PASSED
0	01.02.22	RENAMED FROM UWSTD-E-SPS-60kW-VFD-018	YV	TGS	TGS

	INITIALS	DATE
DRAWN	AK	19.02.21
CHECKED	LG	19.02.21
PASSED	JD	19.02.21

Unitywater

Unitywater

IFxxxxxx

SEWAGE PUMPING STATION - 25-60kW VARIABLE FREQUENCY DRIVE

STANDARD DRAWINGS

PUMP 1 VARIABLE FREQUENCY DRIVE SETTINGS

SHEET OF SHEETS | SCALE N/A

REVISION DATE 01.02.22 | REVISION 0

DISCIPLINE CODE E

DRAWING NO.

UWDSTD-E-DR-8023-18

A3

INDEX	DATE	REVISIONS	DRAWN	CHECKED	PASSED
0	01.02.22	RENAMED FROM UWSTD-E-SPS-60kW-VFD-019	YV	TGS	TGS

	INITIALS	DATE
DRAWN	AK	19.02.21
CHECKED	LG	19.02.21
PASSED	JD	19.02.21

Unitywater

Unitywater

IFxxxxxx

SEWAGE PUMPING STATION - 25-60kW VARIABLE FREQUENCY DRIVE

STANDARD DRAWINGS

PUMP 2 VARIABLE FREQUENCY DRIVE SETTINGS

SHEET OF SHEETS | SCALE N/A

REVISION DATE 01.02.22 | REVISION 0

DISCIPLINE CODE E

DRAWING NO.

UWDSTD-E-DR-8023-19

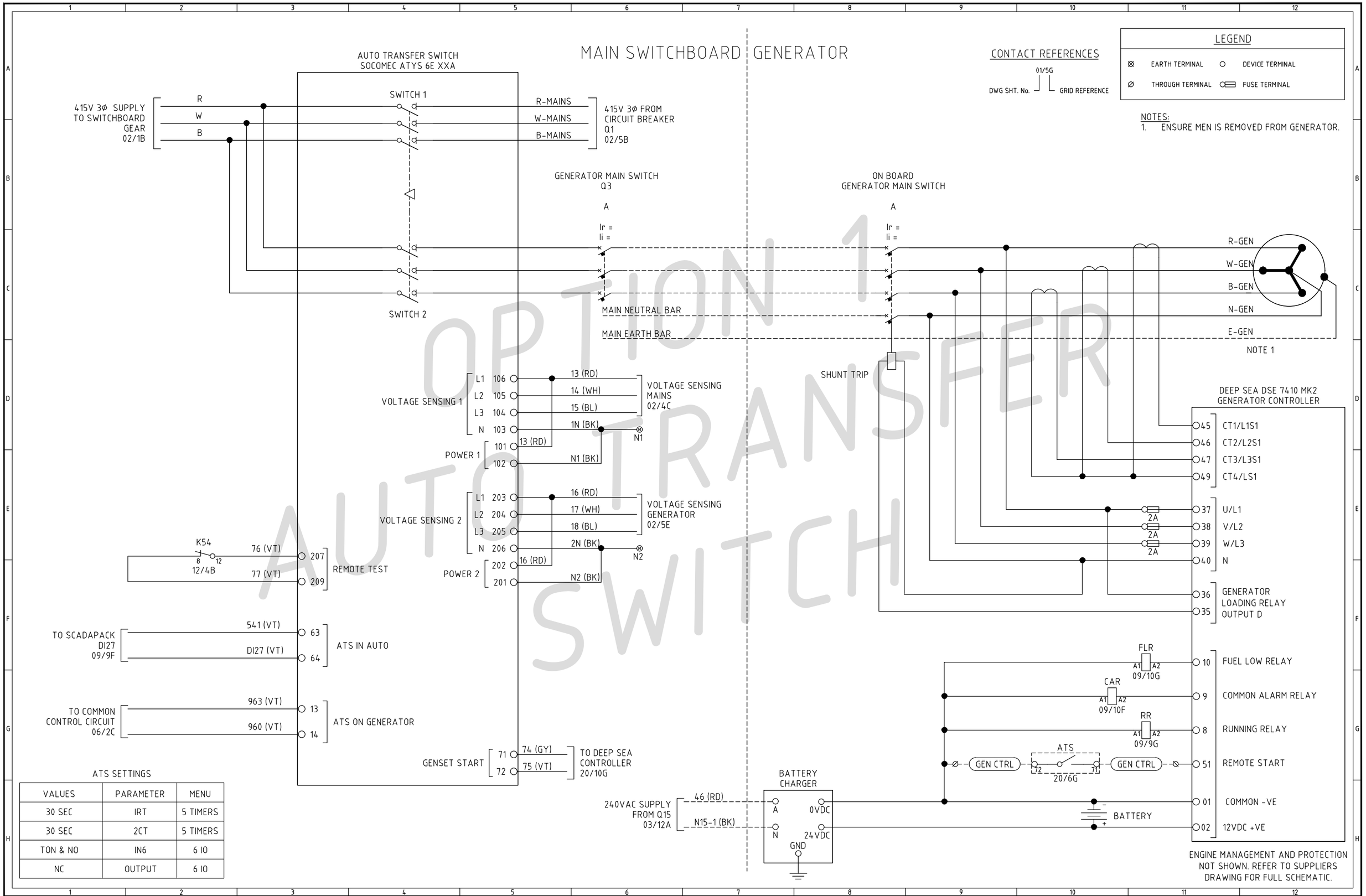

ATS SETTINGS

VALUES	PARAMETER	MENU
30 SEC	IRT	5 TIMERS
30 SEC	2CT	5 TIMERS
TON & NO	IN6	6 IO
NC	OUTPUT	6 IO

A3

INDEX	DATE	REVISIONS	DRAWN	CHECKED	PASSED
0	01.02.22	RENAMED FROM UWSTD-E-SPS-60kW-VFD-020	YV	TGS	TGS

	INITIALS	DATE
DRAWN	AK	19.02.21
CHECKED	LG	19.02.21
PASSED	JD	19.02.21

Unitywater

Unitywater
IFxxxxxx
SEWAGE PUMPING STATION - 25-60kW VFD
STANDARD DRAWINGS
ATS & GENERATOR CONTROLLER SCHEMATIC DIAGRAM

SHEET OF SHEETS
SCALE N/A
REVISION DATE 01.02.22
REVISION 0
DISCIPLINE CODE E
DRAWING NO.
UWDSTD-E-DR-8023-20

ALTERNATE PHASE FAILURE RELAY

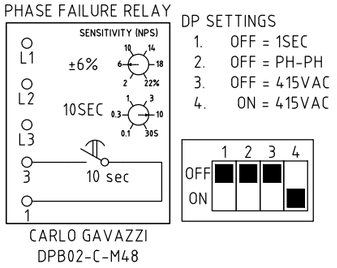

SIGNAL ISOLATOR EXAMPLE

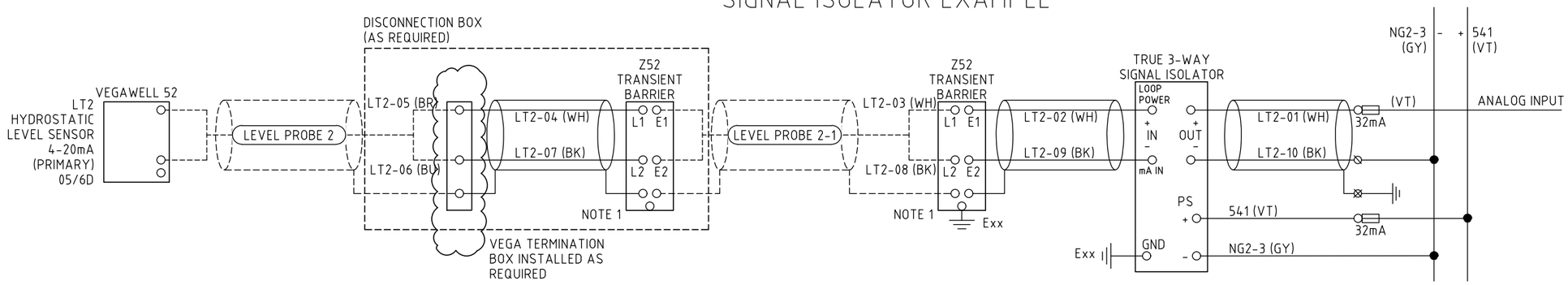

24VDC TO 12VDC CONVERTER REQUIRED IF E-SERIES RADIO IS TO BE INSTALLED

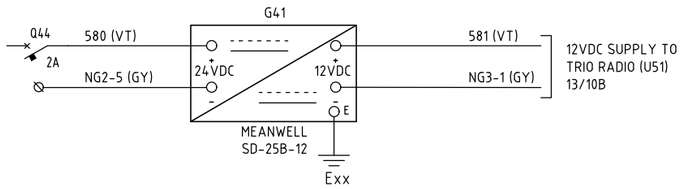

NOTES
1. TRANSIENT BARRIERS INSTALLED IN DISCONNECT CUBICLE SHALL BE NOVARIS SL36-EC90, IN SWITCHBOARDS SL36-G.
2. SURGE PROTECTION DEVICES ARE NOT REQUIRED IF THE SIGNAL LOOP DOES NOT EXTEND OUTSIDE OF THE SWITCHBOARD OR THE CONFINES OF A BUILDING.
3. INSTRUMENTATION TWISTED PAIR SCREEN / DRAIN WIRE TO BE GROUNDED AT TELEMETRY / CONTROL END ONLY (UNLESS INSTRUMENT MANUFACTURER'S INSTRUCTIONS STATE OTHERWISE)

CONTACT REFERENCES
01/5G
DWG SHT. No. — GRID REFERENCE

LEGEND

⊠	EARTH TERMINAL	○	DEVICE TERMINAL
⊘	THROUGH TERMINAL		FUSE TERMINAL

A3

INDEX	DATE	REVISIONS	DRAWN	CHECKED	PASSED
0	01.02.22	RENAMED FROM UWSTD-E-SPS-60kW-VFD-025	YV	TGS	TGS

	INITIALS	DATE
DRAWN	AK	19.02.21
CHECKED	LG	19.02.21
PASSED	JD	19.02.21

Unitywater

Unitywater
IFxxxxxx
SEWAGE PUMPING STATION - 25-60kW VFD
STANDARD DRAWINGS
ALTERNATE EQUIPMENT

SHEET OF SHEETS | SCALE N/A
REVISION DATE 01.02.22 | REVISION 0
DISCIPLINE CODE E
DRAWING NO.
UWDSTD-E-DR-8023-25

SITE PLAN

NOTES:

1. LOCATE ALL EXISTING SERVICES IN THE AREA PRIOR TO COMMENCEMENT OF WORKS, INCLUDING EXECUTING A DIAL BEFORE YOU DIG.
2. ALL WORKS TO COMPLY TO UNITYWATER SPECIFICATION, AS/NZS3000 (ELEC WIRING RULES) AND OTHER RELEVANT CODES & SPECIFICATIONS.
3. DISUSED SITE ASSETS ARE TO BE REMOVED AND THE SITE MADE GOOD AT THE END OF CONSTRUCTION.
4. WHERE A CHANGE OF DIRECTION IS REQUIRED FOR ELECTRICAL CONDUITS, LARGE SWEEP BENDS ARE TO BE USED.
5. RECONNECT ALL EXISTING CIRCUITS AND INSTRUMENTS

www.dialbeforeyoudig.com.au
DIAL1100 BEFORE YOU DIG

CAUTION

THE LOCATION OF SERVICES ON THIS DWG HAVE NOT BEEN PROVEN AND ARE INDICATIVE ONLY. TAKE MEASURES TO LOCATE SERVICES PRIOR TO COMMENCEMENT OF WORKS.

A3

INDEX	DATE	REVISIONS	DRAWN	CHECKED	PASSED
0	01.02.22	RENAMED FROM UWSTD-E-SPS-60kW-VFD-050	YV	TGS	TGS

	INITIALS	DATE
DRAWN	AK	19.02.21
CHECKED	LG	19.02.21
PASSED	JD	19.02.21

Unitywater

Unitywater
IFxxxxxx
SEWAGE PUMPING STATION - 25-60kW VFD
STANDARD DRAWINGS
SITE PLAN

SHEET OF SHEETS | SCALE N/A
REVISION DATE 01.02.22 | REVISION 0
DISCIPLINE CODE E
DRAWING NO.
UWDSTD-E-DR-8023-50