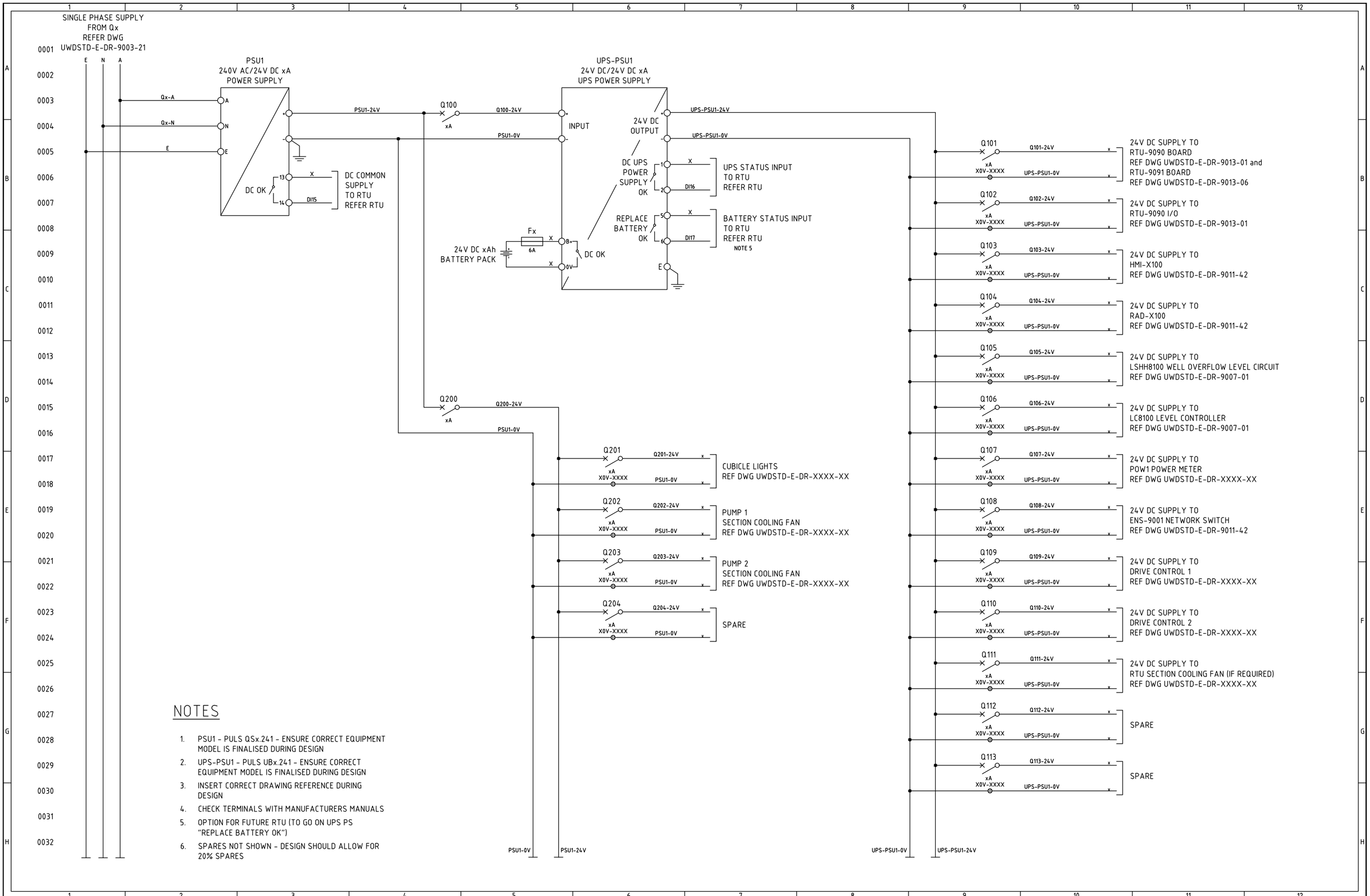

NOTES

1. PSU1 - PULS QSx.241 - ENSURE CORRECT EQUIPMENT MODEL IS FINALISED DURING DESIGN
2. UPS-PSU1 - PULS UBx.241 - ENSURE CORRECT EQUIPMENT MODEL IS FINALISED DURING DESIGN
3. INSERT CORRECT DRAWING REFERENCE DURING DESIGN
4. CHECK TERMINALS WITH MANUFACTURERS MANUALS
5. OPTION FOR FUTURE RTU (TO GO ON UPS PS "REPLACE BATTERY OK")
6. SPARES NOT SHOWN - DESIGN SHOULD ALLOW FOR 20% SPARES

A3

REV	DATE	DESCRIPTION OF CHANGE	DRAWN	DESIGNED	REVIEWED	APPROVED	COMPANY
0	12.12.25	ISSUED FOR USE	YV	TGS	TGS	TGS	UNITYWATER

Unitywater

Unitywater

STANDARD ELECTRICAL DRAWING
NETWORK - TYPICAL ESSENTIAL/NON-ESSENTIAL ELV POWER DISTRIBUTION
ELV DISTRIBUTION

PROJECT NUMBER	IFXXXXXX
REVISION DATE 12.12.25	REVISION 0
DISCIPLINE CODE	E
DRAWING NO.	UWDSTD-E-DR-9004-22